M D T 2 0 S E R V I C E G U I D E

The Morrow MDT20 is a customized version of the Lear Siegler ADM22 Video Display Terminal. For servicing purposes at the dealer level, the MDT20 and ADM22 are identical, with the exception of certain user features that depend on the presence of a Morrow-specified ROM on the terminal motherboard (A44). User features are discussed in section 1 of this manual.

Copyright (C) 1983 by Morrow Inc.

All rights reserved.

No part of this publication may be reproduced, transmitted, transcribed, stored in a retrieval system, or translated into any language or computer language, in any form or by any means, electronic, mechanical, magnetic, optical, chemical, manual or otherwise, without prior written permission of Morrow Inc.

DISCLAIMER

No representations or warranties, express or implied, are made with respect to the contents hereof, including, but not limited to, the implied warranty of merchantability or fitness for a particular purpose. Further, Morrow Inc., reserves the right to revise this publication and to make changes from time to time in the content hereof without obligation to notify any person of such revision.

Morrow
600 McCormick St.
San Leandro, CA 94577

IMPORTANT WARRANTY INFORMATION

LIMITED WARRANTY

Morrow, Inc. warrants its products to be free from defects in workmanship and materials for the periods indicated below. This warranty is limited to the repair and replacement of parts only.

This warranty is void if, in the sole opinion of Morrow Inc., the product has been subject to abuse or misuse, or has been interconnected to other manufacturer's equipment for which compatibility has not been established in writing.

Circuit boards - Parts, including the printed circuit board, purchased as factory assemblies, are warranted for a period of ninety (90) days from the original invoice/purchase date.

Electro-mechanical peripherals - Peripheral equipment such as floppy or hard disk drives, etc., not manufactured by Morrow, Inc., are included in the limited warranty period of 90 days from the original invoice date when sold as part of a Morrow system.

Exception - Expendable items such as printer ribbons, software media, and printwheels are not covered by any warranty.

Software/Firmware - Morrow, Inc. makes no representations or warranties whatsoever with respect to software or firmware associated with its products and specifically disclaims any implied or expressed warranty of fitness for any particular purpose or compatibility with any hardware, operating system, or software/firmware. Morrow, Inc. reserves the right to alter or update any program, publication or manual without obligation to notify any person of such changes.

LIMITATION OF LIABILITY: THE FOREGOING WARRANTY IS IN LIEU OF ALL OTHER WARRANTIES, EXPRESSED OR IMPLIED, INCLUDING, BUT NOT LIMITED TO, THE IMPLIED WARRANTIES OF MERCHANTABILITY AND FITNESS FOR A PARTICULAR PURPOSE. IN NO EVENT WILL MORROW, INC. BE LIABLE FOR CONSEQUENTIAL DAMAGES EVEN IF MORROW, INC. HAS BEEN ADVISED OF THE POSSIBILITY OF SUCH DAMAGES.

WARRANTY RETURN PROCEDURE

Should a buyer experience a defect in either workmanship or materials during the warranty period, any Morrow Authorized Service Center will replace or repair the product at its expense only if the product is promptly returned to the dealer or Service Center with dated proof of purchase.

Should factory repair be necessary, the Service Center shall contact Morrow Customer Service for a Return Materials Authorization (RMA) number.

TABLE OF CONTENTS

SECTION I	GENERAL DESCRIPTION
SECTION II	INSTALLATION
SECTION III	OPERATION
SECTION IV	THEORY OF OPERATION
SECTION V	REPAIR PROCEDURES
SECTION VI	REFERENCE DRAWINGS
SECTION VII	PARTS INFORMATION
	APPENDIX

SECTION I
GENERAL DESCRIPTION

1.1 INTRODUCTION

This section describes the specifications of the Morrow Terminal, along with its functional capabilities. These specifications are also listed in Table 1-1.

1.2 PURPOSE AND USE

There are numerous applications of the Morrow Terminal, all involving the transfer of data to and from your Morrow Designs Computer. Data transfer in some applications may be almost exclusively unidirectional, such as from the unit to the computer. A more frequent application is one in which you communicate with your computer, and the computer responds in accordance with its stored program for word processing or other application programs.

The Morrow Terminal has the following general capabilities (all included to enhance the level of performance of your system):

- Twelve inch (30.5 cm) diagonal non-glare display
- Full 128 ASCII character set, in an 80 column by 24-row format
- Four visual attributes - blink, reduce, reverse and underline
- Detachable 92-key keyboard with a typewriter style layout
- Fourteen key numeric keypad
- Separate cursor control keys
- Seven function keys
- Remote or local display editing
- Conversational or block mode communications at fifteen selectable transmission rates
- RS-232C serial asynchronous interfacing
- RS-232C auxiliary buffered communications port
- Non-volatile set-up mode for terminal configuration directly from the keyboard

1.3 PHYSICAL DESCRIPTION

The Morrow Terminal is a two-piece modular design that includes a monitor assembly and a keyboard assembly. The monitor assembly contains the main logic board, the display driver board with associated cathode ray tube (CRT), and the regulated power supply. For user convenience, the power ON/OFF switch and video contrast control are located on the front of the monitor assembly. At the back of the housing are the interface connectors, keyboard connector, and power cord. The keyboard assembly contains the 92-key keyboard and associated logic. A six-foot coiled cord connects the keyboard to the monitor assembly. Both assemblies are packaged in lightweight, compact housings that provide flexibility and convenience in operation.

1.4 OPERATIONAL DESCRIPTION

The Morrow Terminal is an interactive device which is used to communicate with your Morrow Designs computer. Using a keyboard similar to that of a typewriter, you may enter information which is either immediately transmitted to the computer (conversation mode), or, stored in display memory for block transmission to the computer (block mode). (For most applications, your Morrow Terminal will be used in the conversation mode.) Data from the computer is received and displayed at baud rates as high as 19200.

1.4.1 Control Logic

The Control Logic contains the microprocessor and various integrated circuits which control the operation of your Morrow Terminal. These operations include: timing and control, data handling and storage, interpreting and responding to commands from the keyboard and the computer, video control, I/O interfacing and status control.

Data sent to the terminal is received by the Control Logic from the Interface Port. The microprocessor decodes the input data and reformats it into data and control instructions for the Video Logic and Control Logic.

1.4.2 Video Logic and Drive

The Video Logic and Drive section provides the circuitry needed to drive the CRT on the display drive board. The 2K bytes of display random access memory (RAM), and character generation circuits, as well as the video logic, are on the main logic board. The CRT screen can display 24 lines of data containing as many as 80 characters per line. Data from the control logic is written into the display RAM; control instructions from the CRT controller cause the contents of the RAM to be displayed on the monitor screen. Figure 1-1 depicts the character format and associated hex codes used for display in the Morrow Terminal.

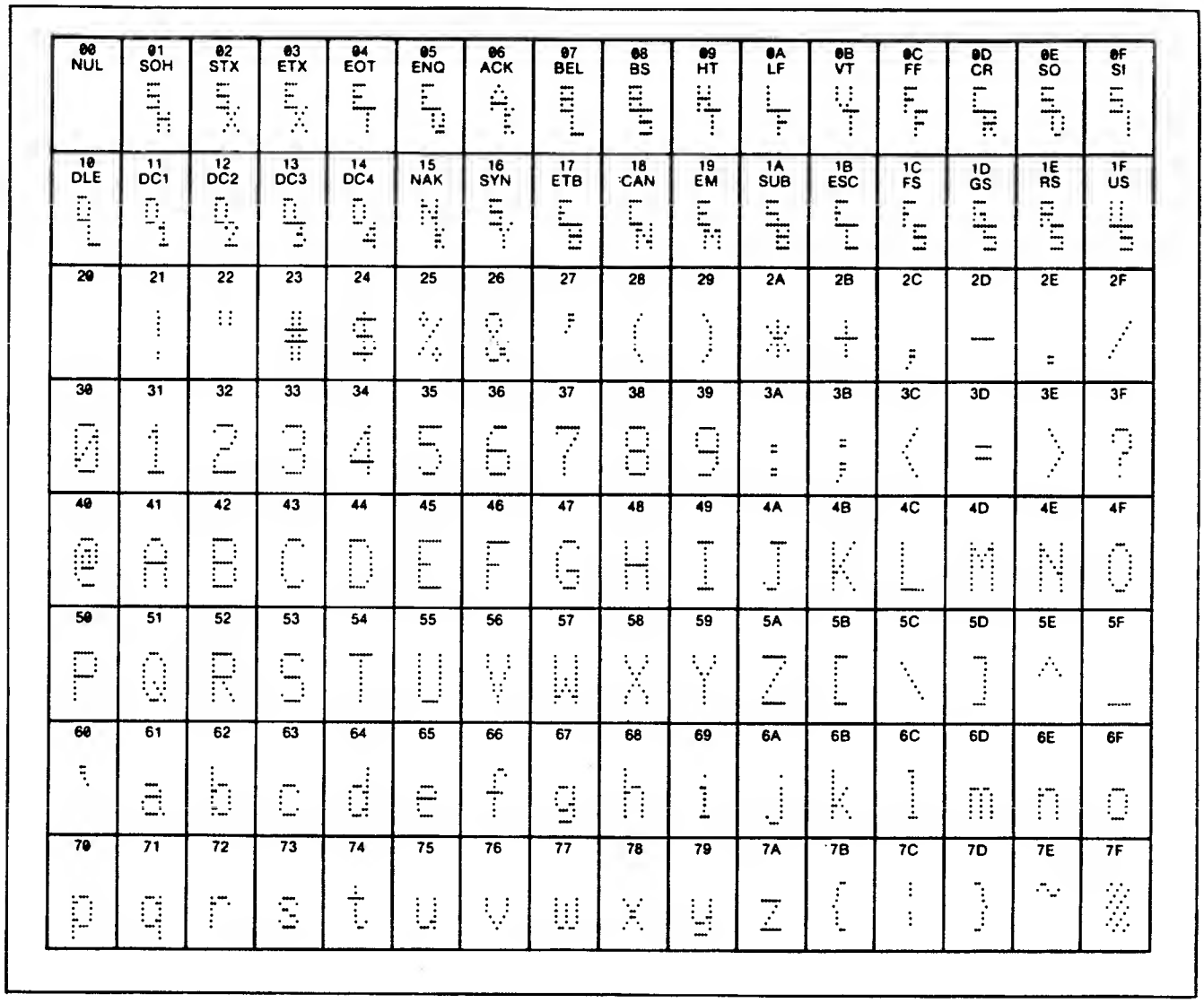

Figure 1-1. 128 Character ASCII Format, with Hex Codes

		CONTROL CHARACTERS		DISPLAYABLE CHARACTERS					
HEX BYTE 2ND	1ST BITS $^{4}3_{21}$ BITS $^{7}6_{5}$	0 0_{0_0}	1 0_{0_1}	2 0_{1_0}	3 0_{1_1}	4 1_{0_0}	5 1_{0_1}	6 1_{1_0}	7 1_{1_1}
0	0000	NUL	DLE		0	@	P	`	p
1	0001	SOH	DC1	!	1	A	Q	a	q
2	0010	STX	DC2	"	2	B	R	b	r
3	0011	ETX	DC3	#	3	C	S	c	s
4	0100	EOT	DC4	$	4	D	T	d	t
5	0101	ENQ	NAK	%	5	E	U	e	u
6	0110	ACK	SYN	&	6	F	V	f	v
7	0111	BEEP	ETB	'	7	G	W	g	w
8	1000	BS (←)	CAN	(	8	H	X	h	x
9	1001	(SKIP) HT	EM	)	9	I	Y	i	y
A	1010	LF (↓)	SUB	*	:	J	Z	j	z
B	1011	VT (↑)	ESC	+	;	K	[	k	{
C	1100	FF (→)	FS	,	<	L	\	l	¦
D	1101	CR	GS	-	=	M	]	m	}
E	1110	SO	(HOME) RS	.	>	N	^	n	~
F	1111	SI	(NEW LINE) US	/	?	O	_	o	DEL

USE CTRL KEY WITH DISPLAYABLE CHARACTER KEYS TO PRODUCE CONTROL CODES

Figure 1-2. Displayable USASCII Character Set and Control Codes

1.4.3 Keyboard

The keyboard contains 92 keys from which data entry and control functions are locally initiated. In the conversational transmission mode, each keystroke is encoded into a corresponding ASCII character by the control logic, which is immediately transmitted to the computer. In half-duplex operation the character is also routed back to the video logic, or in full-duplex operation, echoed from the computer via the Main Port. In the block transmission mode, characters are displayed on the CRT and held within the terminal, but are not transmitted to the computer until the appropriate SEND LINE or SEND PAGE command has been given.

1.4.4 Main and Auxiliary Ports

The Morrow Terminal comes standard with two ports - the Main Port and the Auxiliary Port, both of which are located on the back of the terminal. Your Morrow Designs computer and the Morrow Terminal interface via the Main Port. The Auxiliary Port is an RS-232C serial output port, with a control signal interface. Usually, an asynchronous serial receive only (RO) printer is connected to the Auxiliary Port. The printer used may be a character-by-character or buffered type, and may operate at a different transmission rate than that used on the Main Port.

With the X-ON/X-OFF (Busy/Ready Handshake) feature enabled, the Morrow Terminal is able to pass a busy status of the Auxiliary Port device to the computer and also state the terminal's local condition during operations which need long execution times. This avoids any loss of data.

Data and control information from the computer is routed through the Main Port to the Control Logic. The control logic causes data to be displayed on the monitor in the same manner as the keyboard data. The interface logic contains the circuitry appropriate for interfacing via RS-232C signals. The interface logic also contains the baud rate clock which permits the Morrow Terminal to receive and transmit data at selected baud rates from 75 to 19200 baud.

The Morrow Terminal transmits blocks of data by retrieving data from the display memory for routing by the control logic. The control logic reformats the data and routes data and control information to the appropriate interface. Interface logic is used to prepare data and control information for transmission to the appropriate device connected.

1.4.5 Set-Up Logic

The Morrow Terminal features a non-volatile Set-Up Mode to establish terminal operating characteristics. Through commands from the keyboard or computer, the control logic causes the Set-Up parameters to be loaded or read into system RAM. This information can then be

"saved" to non-volatile RAM pressing the "SAVE" key on the keyboard, thereby retaining the set-up with the power off. Features selectable in Set-Up Mode include: baud rates, word structure, protected-field, visual attributes, cursor type, communications control, operating modes, emulations and scrolling.

1.4.6 Regulated Power Supply

The Morrow Terminal power supply is located in the rear of the base. The power supply can accept line voltage inputs of 115 VAC or 230 VAC (with 230-volt power supply option installed).

Table 1-1
Morrow Terminal Specifications

SPECIFICATION	DESCRIPTION
DISPLAY	
CRT Screen	12-inch (30.5 cm) diagonal, P31 Green Phosphor with etched faceplate.
Vertical Refresh Rate	50 or 60 Hz, depending on line frequency non-interlaced.
Horizontal Refresh Rate	19.2 kHz.
Display Page	1920 characters/page.
Display Format	80 characters x 24 lines, plus a status line which indicates terminal configuration.
Character Set	128 ASCII characters, plus line drawing and four-segment cell graphics.
Character Matrix	7 x 11 dot matrix.
Character Field	9 x 12 dot matrix.
Cursor	9 x 12 dot matrix, selectable block or underline; steady or blinking.
Cursor Controls	Left, Right, Up, Down, Home, Return, Read Cursor, and Cursor Addressing.
Visual Attributes/ Protected Fields	Blink, reverse, underline, reduced intensity, and combinations thereof, used to designate protected fields for editing and transmission formatting when protect mode is set.
Alpha-Numeric	26-letter alphabet with upper and lower case, numerics 0 through 9, Return, Shift, Punctuation, Backspace, Tab, and Caps Lock. Most keys are auto repeating (approximately 15 characters per second). Selectable audible key-click.

SPECIFICATION	DESCRIPTION
KEYBOARD	
Numeric Key Pad	14 keys: 0 through 9, Enter, Comma, Period, and Minus.
Cursor Control Keys	Right, Left, Up, Down, plus Home.
Edit Keys	Character insert, character delete, line insert, and line delete.
Function Keys	F1 - F7 which transmit a single-character control code.
Functional Command Keys	Set-Up, Break, ESCape, Control Print Screen, Line Feed, Delete and Save.
EDITING	
Edit Operation	Clear Entire Screen, insert characters, delete characters, insert lines, delete lines, erase line, erase to the end of line, erase to the end of page; all or unprotected only.
COMMUNICATIONS	
Block Mode	Send line, and send page; all or unprotected only.
Conversation Mode	Interactive (character-by-character transmission, Full or Half Duplex).
Program Mode	Control characters may be transmitted to computer and/or entered on screen.
Monitor Mode	Hex codes are displayed for all received data.
Interfaces	Main Port: RS-232C Auxiliary Port: RS-232C
Data Rates	75, 110, 150, 300, 450, 600, 900, 1200, 1800, 2400, 3600, 4800, 7200, 9600, and 19200 baud.

SPECIFICATION	DESCRIPTION
Word Length	7 or 8 data bits.
Parity	Even, odd, or no parity.
Stop Bits	1 or 2 stop bits.
Format	ASCII serial asynchronous communications.
Busy Indication	Main Port: Sends X-OFF (DC3) or X-ON (DC1) to computer on busy/ready condition of main or auxiliary port. Auxiliary Port: Senses busy level on Pin 20 (DTR) of the auxiliary interface.
GENERAL	
Operating Environment:	
Temperature	Operating: 10° C to 40° C (41° F to 104° F) Storage: -15° C to 65° C (5° F to 150° F)
Humidity	10% to 85% without condensation.
Power Requirements:	
Standard	115V + 10%, 60 Hz, 50 watts.
Optional	230V + 10%, 50 Hz, 50 watts.
Heat Dissipation	222 BTU/Hr.
Dimensions:	
Width (Monitor)	16.5 inches (42.0 cm).
Depth (Monitor)	14.6 inches (37.0 cm).
Height (Monitor)	12.2 inches (31.0 cm).
Depth (Keyboard)	7.5 inches (19.0 cm).
Height (Keyboard)	2.8 inches (7.0 cm).
Weight	24.2 pounds (11.0 kg).

1.5 DISPLAY CHARACTER FORMAT

The standard Morrow Terminal character set contains 128 ASCII characters, 32 of which are control characters (see Figures 1-1 and 1-2). The entire character set may be displayed on the CRT screen by setting the terminal in Program Mode.

1.6 MORROW TERMINAL WORD STRUCTURE

The Morrow Terminal transmits serial asynchronous data in a 10 or 11 bit format in the following sequence: one start bit, seven or eight data bits, one or no parity bit and one or two stop bits. The parity bit can be either odd, even, or none and is defined by a Set-Up Mode selection.

The received data shall be formatted the same as the transmitted data. The word structure, baud rates, and other communications characteristics are established via Set-Up Mode selections. Refer to Section II for details.

1.7 230 VAC OPERATION

The Morrow Terminal may be optionally ordered to operate on 230-volts AC. This option must be requested at the time of the order.

SECTION II
INSTALLATION

2.1 INTRODUCTION

This section contains installation instructions for the Morrow Terminal. Also included are descriptions of on-site safety requirements, initial terminal configuration, communications interfaces, plus procedures for power turn-on, power turn-off, and routine maintenance.

2.2 SAFETY REQUIREMENTS

No special safety precautions are required when installing your Morrow Terminal. Simply observe normal safety procedures.

2.3 UNPACKING AND INITIAL INSPECTION

Each Morrow Terminal is thoroughly inspected and carefully packaged prior to shipment. Every precaution is taken to ensure that each unit is complete and ready for installation at the customer's site. However, it is recommended that each unit be inspected upon receipt for transit damage. Start by examining the exterior of the package for evidence of rough or careless handling; then perform a thorough visual inspection of the internal components and subassemblies. As a rule, most transportation companies will not honor claims for damage unless they are filed promptly; therefore, the following steps should be taken:

1. Verify that each item shown on the Sales Order Packing Slip has been included in the shipment. Contact Morrow Designs or your dealer immediately in the event of a packing shortage.

2. Verify that the serial number of the unit corresponds to that shown on the invoice.

3. Check the hardware to determine if any assemblies or screws were loosened during shipment. Tighten as required.

4. Inspect for dust or foreign material which may impair electrical contact when cable connections are made.

5. Install and test the Morrow Terminal as soon as possible after delivery. (This is very important since internal damage to the equipment cannot be determined by visual inspection alone.)

6. If, in your opinion, the equipment has been damaged - either internally or externally - notify your dealer immediately, and ask him to make an inspection. If assistance is needed to describe the extent of damage or the repairs that will be necessary, contact our Customer Service Department.

2.4 SITE REQUIREMENTS

The Morrow Terminal may be conveniently used in a normal office environment, as no special mounting provisions are required. It is recommended that the environment be weather protected, with an ambient temperature range of 41° F to 104° F (10° C to 40° C), and a relative humidity of not greater than 85%.

CAUTION

Whenever the Morrow Terminal is physically moved from a cold location to a warmer environment, be sure to allow sufficient time for the equipment temperature to equalize with the warmer location before activating the unit. Condensation developed by the temperature differential could possibly impair the Morrow Terminal.

The physical dimensions of the Morrow Terminal are shown in Figure 2-1. The basic requirements for installation are as follows:

- Table or desk mounting.
- Standard three-pronged 115-volt (230-volt) A.C. power outlet.
- Cable connection to the computer; serial printer, or other auxiliary device.

2.5 INITIAL PREPARATION

2.5.1 Line Voltage Selection

The Morrow Terminal is shipped connected for either 115-volt or 230-volt AC operation, as specified on the purchase order. Any change in line voltage requires circuit changes which can only be performed by factory authorized maintenance personnel.

2.5.2 Set-Up Mode Features

The operating characteristics of the Morrow Terminal are controlled by firmware "switches" that are displayed on the status line when Set-Up Mode is commanded. Figure 2-3 illustrates the display of the status line and the standard default settings. The status line is broken into nine four-bit "nibbles," one through nine, and baud = xxxx, nibble 10. Each nibble has four bits, or switches, that can be set to "0" or "1". Table 2-1 summarizes the functions that are selectable in nibbles 1 through 10 when in Set-Up Mode.

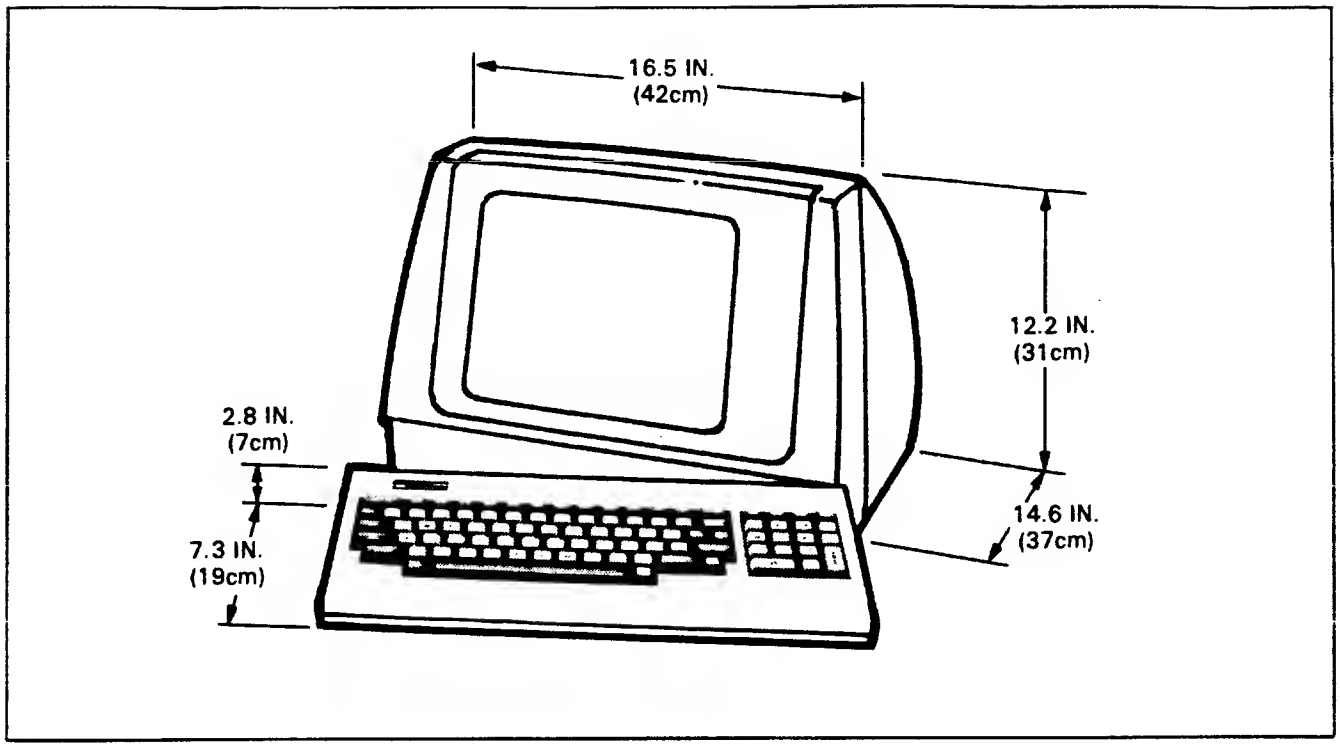

Figure 2-1. Morrow Terminal Mounting Requirements

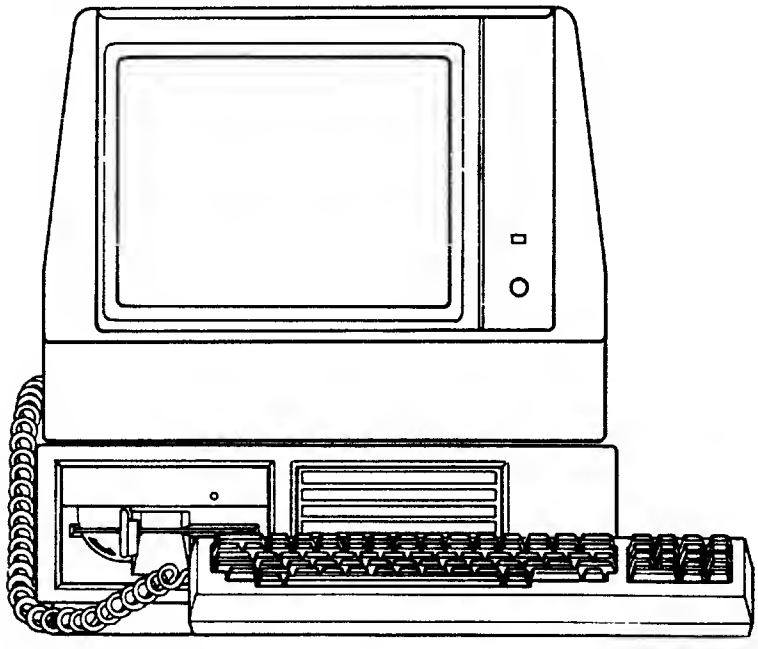

Figure 2-2. Typical Morrow Terminal Applications

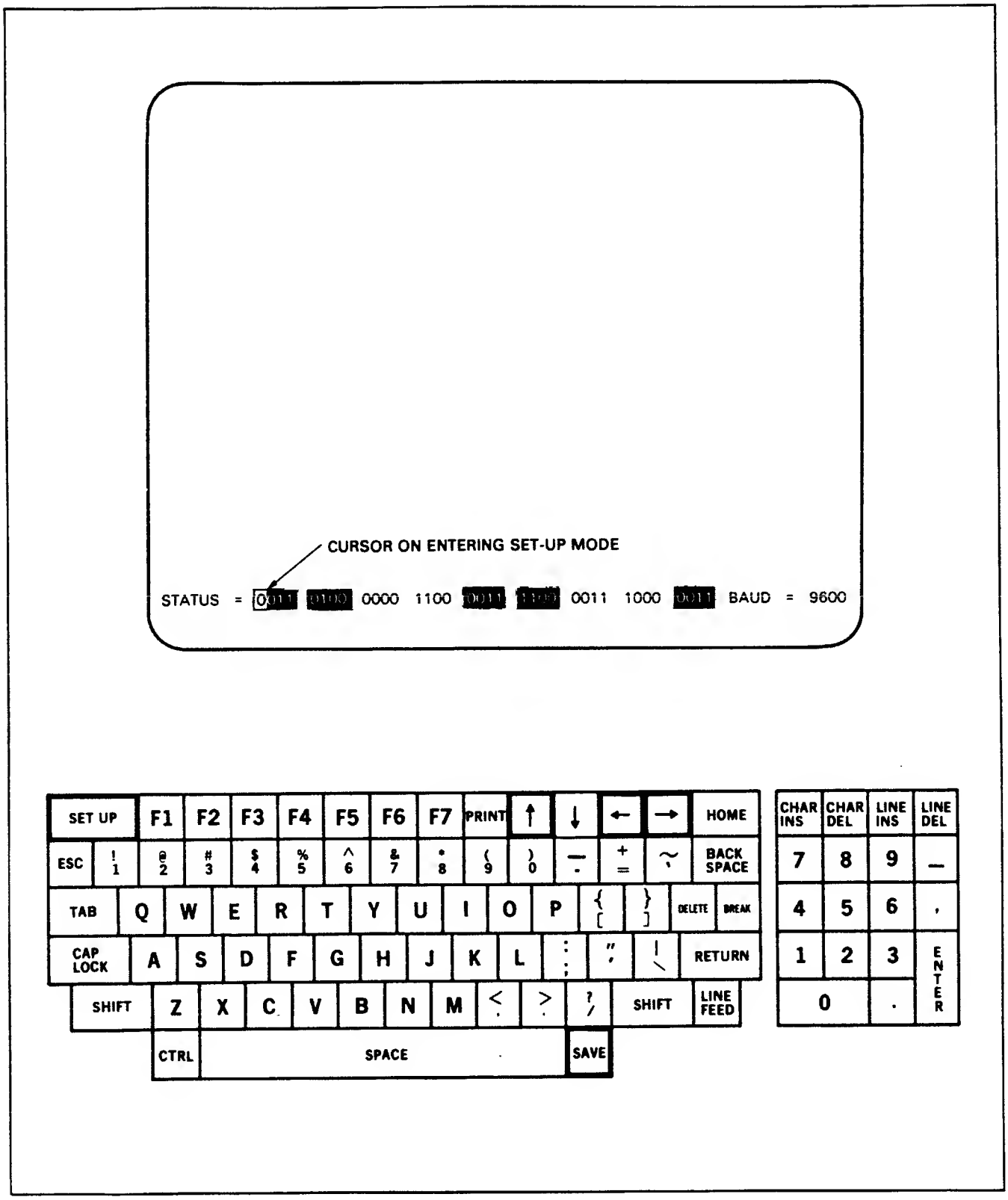

Figure 2-3. Morrow Terminal Set-Up Mode Display and Associated Keys

Entering Set-Up Mode - Pressing the Set Up key on the upper-left corner of the keyboard causes the Morrow Terminal to enter Set-Up Mode. Pressing the key again will cause the terminal to exit set-up and return the previously established mode. When Set-Up Mode is entered the Morrow Terminal will:

1. Scroll the display up one line and present the 25th status line, and

2. Transmit an X-OFF (DC3) code to the computer - if the terminal was on-line and the X-ON/X-OFF protocol was enabled.

When Set-Up Mode is exited the display will scroll down one line (no data is lost) and the terminal will transmit an X-ON (DC1) code under the conditions noted in number 2 above.

Note

Changing communications characteristics when in Set-Up Mode may affect or prevent further data transfer with the computer or auxiliary device.

Selecting Functions - When Set-Up Mode is entered, the cursor will move to bit 3 of nibble 1 (refer to Figure 2-3). The cursor is moved to the bit to be changed by the ← and → cursor control keys. Pressing the ↑ key when the cursor is positioned over the desired bit (the "=" for nibble 10) will alternately select "0" or "1" for that function, or sequentially select the various baud rates for nibble 10. Any invalid keystroke will sound the audible alarm and the character will be ignored.

Saving Set-Up Functions - When the various functions are selected they take effect upon exiting Set-Up Mode. If Set-up Mode is exited by pressing the SET-UP key, then the set-up is stored in temporary "working" memory and will be lost if the terminal is powered-down. To cause the set-up functions to be saved in non-volatile memory, press the SAVE key when in Set-Up Mode. A save operation will not be performed if the SAVE key is pressed while the terminal is in any mode other than Set-Up. The Morrow Terminal will always power-up with the last saved set-up condition.

2.6 INTERFACE INFORMATION

The Morrow Terminal may be cabled directly to a local computer; serial printer, or other auxiliary device; or it may be connected via telephone data lines to a remote computer located anywhere in the world. Figure 2-2 shows a typical Morrow Terminal application. Figure 2-4 shows the rear panel locations of the interface connectors.

2.6.1 RS-232C Interface (J1)

The Main Port interface provides RS-232C signals and levels as specified in the RS232 standard. The maximum permissible cable length is 50 feet for RS-232C applications.

2.6.2 Auxiliary Port Interface (J2)

The Auxiliary Port is used for connecting a receive only (RO) serial printer or other RO device to the terminal using RS-232C signal levels. The Auxiliary Port may be set for a different baud rate and word structure than the Main Port. The Morrow Terminal can sense a busy condition to prevent data loss by the auxiliary device.

2.7 POWER TURN-ON

1. Set the ON-OFF switch to ON (refer to Figure 2-4).

2. Wait approximately 20 seconds for the unit to warm up. The cursor should appear in the HOME position and the terminal will sound the audible alarm.

   2a. If the cursor does not appear, turn off the Morrow Terminal, wait 15 seconds and apply power again. If the cursor still does not appear, check the CONTRAST control, then contact your dealer or our Customer Service Department.

CAUTION

To avoid damage to the CRT screen when the terminal is to remain ON but unchanged for extended periods of time, reduce the screen brightness using the CONTRAST control.

3. Adjust CONTRAST control (Figure 2-4) for desired display brightness.

2.8 POWER TURN-OFF

Turn off the Morrow Terminal by setting the ON/OFF switch to OFF.

2.9 INSTALLING THE MORROW TERMINAL

1. Check the ON/OFF switch (refer to Figure 2-4) to ensure that it is set to OFF.

2. Connect the data interface cable(s) to the terminal using the appropriate interface information (paragraph 2.6).

3. Plug the power cord into a grounded AC outlet of the proper voltage.

4. Turn on the terminal.

Note

The BAUD RATE is factory set to 9600 baud.

5. Select the Set-Up Mode functions as desired to establish the operating parameters of the Morrow Terminal (refer to Table 2-1). If the terminal is to power-up with the selected functions, execute a Set-Up "SAVE" operation (refer to paragraph 2.5.2).

2.10 CARE OF THE MORROW TERMINAL

Proper care of the Morrow Terminal consists of performing the routine cleaning and inspection procedures listed in the following paragraphs.

2.10.1 Cleaning

At periodic intervals, clean the exterior housing and lightly dust the unit using a soft brush or damp lint-free cloth. Paper towels may be substituted if desired. Do not use petroleum base cleaners, such as lighter fluid, as this could be harmful to the painted surface. Remove smudges from the CRT exterior screen and the housing with conventional glass cleaners or alcohol. Be careful not to scratch the CRT screen.

2.10.2 Inspection

Periodically inspect the keyboard assembly and switches for freedom of movement. Determine that the intensity of characters displayed on the CRT screen have not diminished. Any required mechanical and electrical adjustment shall only be performed by our factory authorized maintenance personnel.

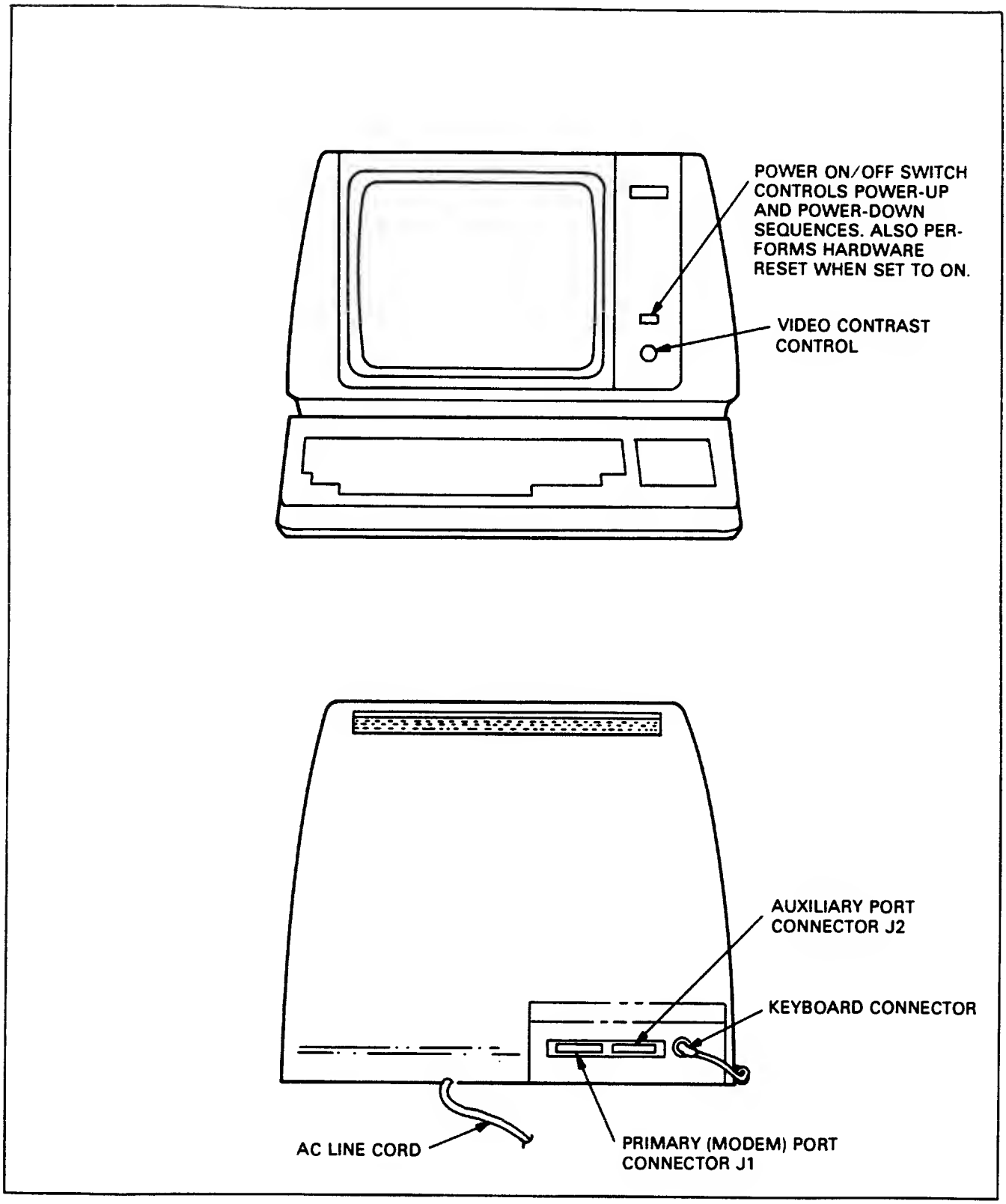

Figure 2-4. Morrow Terminal Controls and Connectors

Table 2-1
Status Line and Recommended Set Up

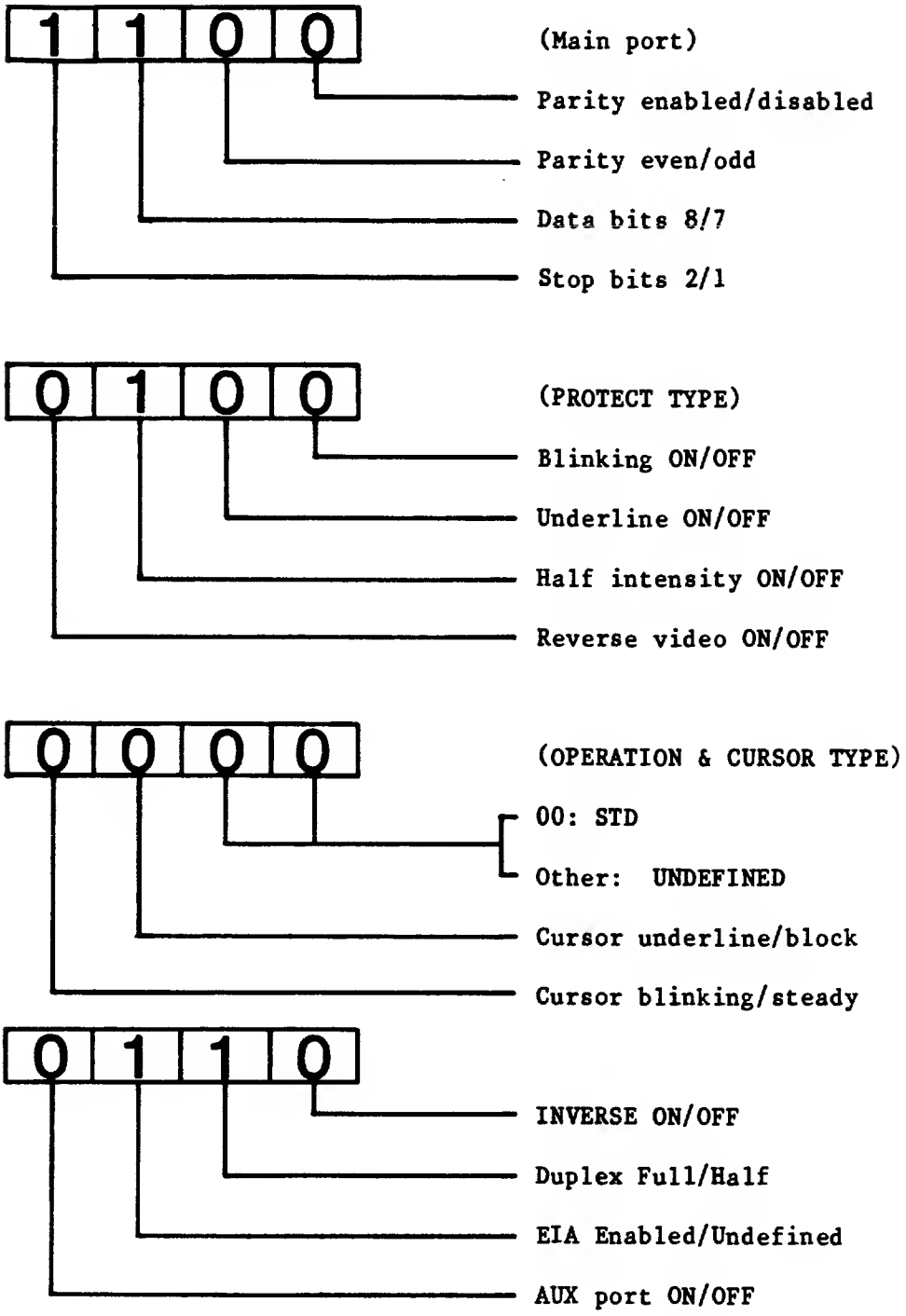

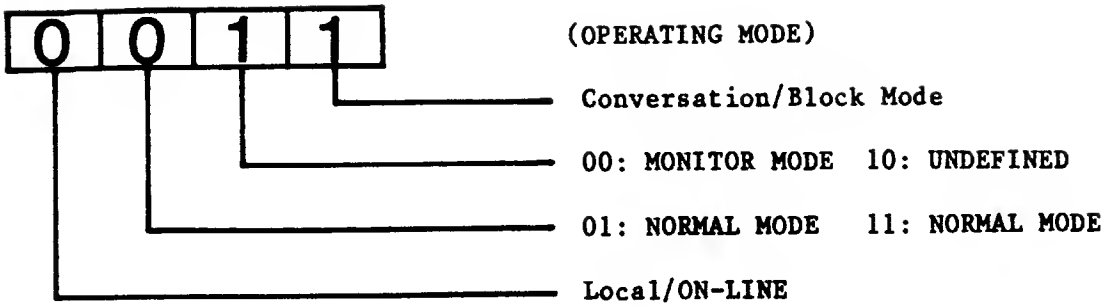
0 0 1 1
(OPERATING MODE)
Conversation/Block Mode
00: MONITOR MODE 10: UNDEFINED
01: NORMAL MODE 11: NORMAL MODE
Local/ON-LINE

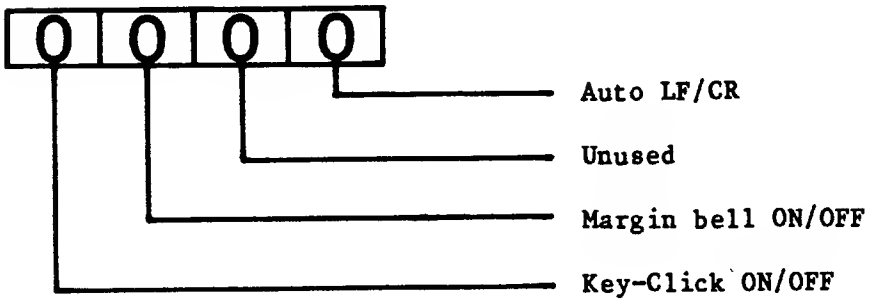
0 0 0 0
Auto LF/CR
Unused
Margin bell ON/OFF
Key-Click ON/OFF

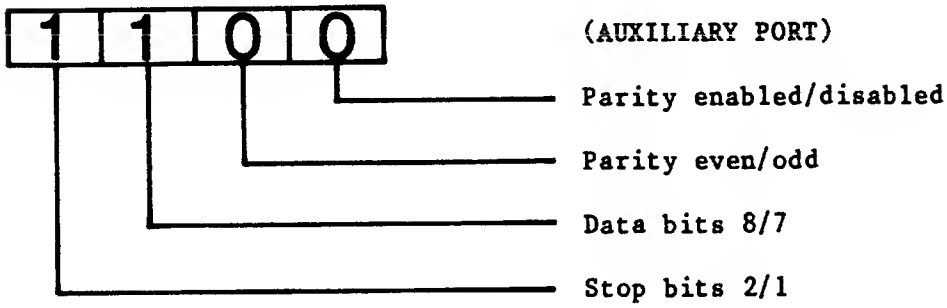
1 1 0 0
(AUXILIARY PORT)
Parity enabled/disabled
Parity even/odd
Data bits 8/7
Stop bits 2/1

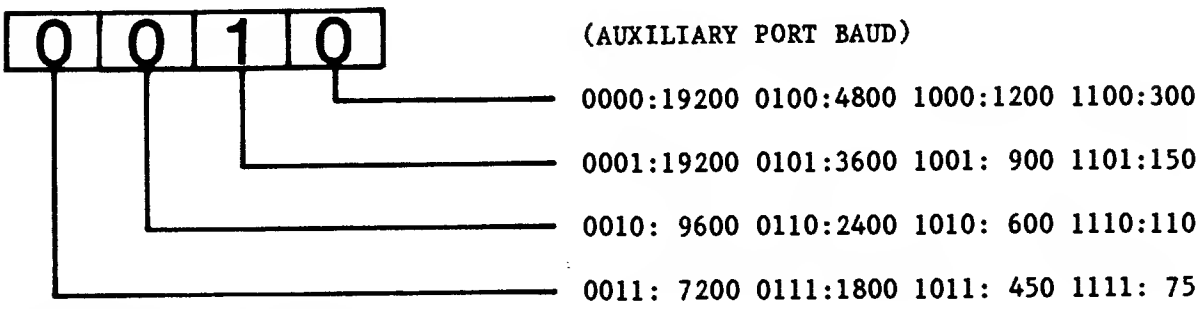
0 0 1 0
(AUXILIARY PORT BAUD)
0000:19200 0100:4800 1000:1200 1100:300
0001:19200 0101:3600 1001: 900 1101:150
0010: 9600 0110:2400 1010: 600 1110:110
0011: 7200 0111:1800 1011: 450 1111: 75

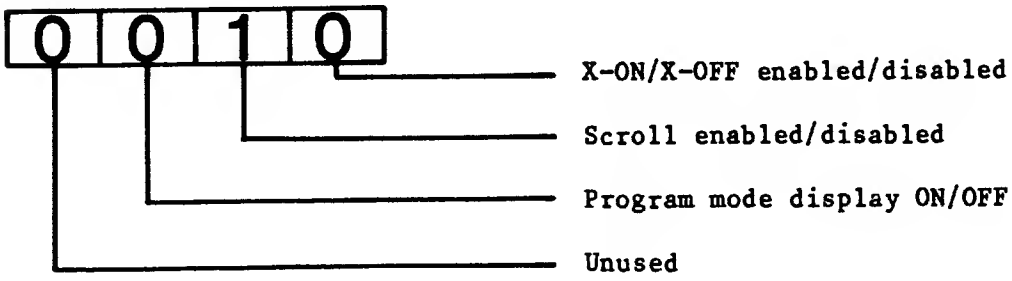
0 0 1 0
X-ON/X-OFF enabled/disabled
Scroll enabled/disabled
Program mode display ON/OFF
Unused

SECTION III
OPERATION

3.1 INTRODUCTION

This section provides the information necessary for the operator to utilize the Morrow Terminal to its fullest capabilities. This section emphasizes the commands required to initiate and control various terminal operations, whether originating from the Morrow Designs computer or the keyboard.

3.2 OPERATIONAL MODES

The Morrow Terminal provides several different modes of operation which are selectable by the computer or from the keyboard. The following paragraphs summarize the operating modes and the associated interactions. The power-on mode conditions are established by the last saved functions selected in the associated Set-Up features. The various command sequences used to change the operating characteristics of the Morrow Terminal are detailed in paragraph 3.4.

3.2.1 On-Line Or Local Mode

On-Line Mode - When the terminal is placed On-Line, data being received will be displayed or acted upon, and keyboard entries will be transmitted and/or displayed, depending on the communications mode selected.

Local Mode - In Local Mode the terminal ignores the communications interface and keyboard entries are displayed or acted on locally, no transmission takes place.

3.2.2 Conversation or Block Mode

Conversation Mode - This is the normal mode for operation with the Morrow Designs Computer. In Conversation Mode, data entered on the keyboard is immediately transmitted to the computer, character-by-character. When Conversation Mode is selected the display action is determined by the setting of Full or Half Duplex Mode as follows:

Full Duplex - Characters typed are transmitted only, no local operation takes place. In order for data to be displayed, it must be echoed from the computer.

Half Duplex - Characters typed are transmitted to the computer and routed to the display locally.

Block Mode - When Block Mode is selected data entered on the keyboard is sent to the display only. This allows the operator the ability to format and correct a screen of data prior to transmission to the computer. The extent of transmission (line or page, unprotected only or all) depends on the command issued to initiate the send operation.

3.2.3 Protect Mode

Protect Mode operation allows specified characters on the display to be "protected" or reserved when performing block transmission, tabbing, or erase operations. Characters to be protected are entered after a "Set Write Protect" command is issued. This will cause the data subsequently entered to be displayed with the "Protected-Field Visual Attribute" selected in Set-Up Mode. If "Protect Mode" is not set, no special actions take place. If Protect Mode is set, then the highlighted (Write-Protected) data is not transmitted or erased when the appropriate commands are initiated and tabbing to unprotected fields is enabled. Setting Protect Mode also prevents the display from scrolling.

3.2.4 Normal Or Monitor Mode

Normal Mode - Normal Mode causes the 96-displayable ASCII characters (20-7F Hex) to be displayed when received. The 32 codes (00-1F Hex) are acted upon only if they are control codes for the Morrow Terminal, otherwise they are ignored.

Monitor Mode - Enabling Monitor Mode causes all received data to be displayed as ASCII hexadecimal pairs (00-7F). No control codes are acted upon and all data is displayed. Monitor Mode may only be exited by resetting the terminal or through Set-Up Mode.

3.2.5 Program Mode

Setting Program Mode causes the terminal to display all 32-control codes (00-1F) instead of acting upon them. This allows the embedding of formatting information particularly useful in block transmission or print output, and as a diagnostic aid.

3.2.6 Set-Up Mode

Set-Up Mode is entered by pressing the SET-UP key on the keyboard. The terminal will sound the audible alarm, transmit an X-OFF code (DC3-13 Hex), if X-ON/X-OFF is enabled, and present the 25th status line on the display by scrolling the data up one line. Changes may then be made to the Set-Up Mode features as described in paragraph 2.5.2. Pressing the SET-UP key again exits Set-Up Mode and causes any changes that were made to take effect. The terminal will transmit an X-ON Code (DC1-11 Hex), if X-ON/X-OFF is enabled, and scroll the data down one line returning the original display. The Morrow Terminal ignores all received data while in Set-Up Mode and any invalid keystroke sounds the audible alarm.

3.3 KEYBOARD OPERATION

The operator uses a keyboard very similar to that of a standard office typewriter to enter data and perform control operations. Functionally the keyboard consists of the displayable 96-ASCII character set keys and various control or modifier keys. All keys will repeat automatically if held down for approximately one-half second or more. Paragraphs 3.3.2 thru 3.3.9 detail the keyboard by the following classes of keys:

- Alphanumeric and Punctuation Keys
- Numeric Keypad
- Modifier Keys
- Cursor Control Keys
- Edit Keys
- Transmission Keys
- Function Keys
- Special Operation Keys

3.3.1 Keystroke Conventions

Ordinarily each keystroke typed by the operator is independent of the one preceding or following it. The 2-key lockout feature of the unit prevents the production of a second code before the key already typed is released.

3.3.2 Alphanumeric and Punctuation Keys

The upper/lower case, numerics, and punctuation characters from the 96-displayable ASCII character set, (21-7E Hex) including SPACE (20 Hex) and DEL (7F Hex), are output to the display and/or transmitted when a key is pressed. Keys that have a double legend produce the lower-case or lower legend unshifted, and the upper-case or upper legend when pressed with the SHIFT key. The SPACE key generates an ASCII 20 Hex code for transmission and occupies a space on the display.

3.3.3 Numeric Keypad

The ASCII numerals 0 through 9 along with minus, comma, and period, are output to the display and/or transmitted (depending upon the communications mode selected) when a key is pressed. The ASCII hex codes generated are identical to the lower legend numerals and punctuation on the main keyboard area.

3.3.4 Modifier Keys

The following keys do not generate an output by themselves, but modify the code generated by the alphanumeric keys on the keyboard.

SHIFT causes the upper legend character of a double legend key to be produced when pressed in conjunction with either SHIFT key. The 26-alpha characters are shifted for upper-case, and unshifted for lower-case.

CAP LOCK this push-on/push-off key causes the 26-alpha characters to stay shifted (upper-case) when on. The numeric and punctuation keys, as well as the various control keys, are not affected.

CTRL causes one of the 32-ASCII control codes to be generated when pressed in conjunction with an otherwise displayable character key. The character generated will not occupy a space on the display unless program mode or monitor mode are set. Some control codes are utilized by the Morrow Terminal, refer to Table 3-1 for details.

3.3.5 Cursor Control Keys

The Cursor is used to indicate the next character position to be entered on the display. The cursor may be positioned by remote commands from the computer or by cursor control keys on the keyboard. The following keys are used to position the cursor on the display:

← → ↑ ↓ and HOME move the cursor as indicated and transmit the ASCII control codes listed in Table 3-1 when the standard Morrow Terminal command code set has been selected.

If the position moved to is protected, the cursor will move to the first unprotected position in the direction commanded.

TAB will cause the cursor to advance to the next tab stop and an HT (09 Hex) code to be generated. There are two types of tab operations possible, Modulo and Protected Field. When Protect Mode is not set, the tab stops are automatically set at every eight character position, 0, 8, 16,...72. When Protect Mode is set, TAB will cause the cursor to advance to the first unprotected character position following the next protected field. Tabbing will move the cursor to the first tab stop on the next line when at the last tab position on a line.

BACKSPACE causes the cursor to move one character position to the left, or end of the previous line if the cursor has been at the beginning of a line. A BS code (08 Hex) is generated when the key is pressed.

RETURN moves the cursor to the beginning of the line it was in, or the beginning of the next line (carriage return + line feed) depending upon the auto-line feed selection made in Set-Up Mode. The key will generate a CR (OD Hex) or US (1F Hex) code per the auto-line feed selection.

LINE FEED moves the cursor to the same column position of the next line down. This will cause a scroll operation to occur if the cursor was on the bottom line of the display, scrolling was enabled in Set-Up Mode, and Protect Mode is not set. If scrolling is disabled or Protect Mode is set, the cursor will move to the same column in the top line. If the position is protected, the cursor will move to the first unprotected position on the line. The Line Feed key produces an LF (0A Hex) code when pressed.

3.3.6 Edit Keys

The Edit keys on the Morrow Terminal operate differently depending on the serial number of the unit. On units with serial numbers lower than [illegible], the Edit keys will only work when the terminal is being used in Block Mode, and therefore will not normally be used. The operations of the Edit keys in Block Mode are detailed below.

On units with serial numbers from [illegible] and up, the Edit keys operate as described below in Block Mode, and when in Conversation Mode, transmit the appropriate WordStar codes.

Terminals with serial numbers between [illegible] and [illegible] may be upgraded at a small cost to give the added convenience of WordStar code transmission.

In Conversation Mode on terminals which have the WordStar capability, the Edit keys perform as follows in WordStar:

CHAR INS toggles WordStar's INSERT mode on and off. It does this by sending a ^V (control-V) when pressed.

CHAR DEL deletes the character at the current cursor position. All characters on the line to the right of the cursor get moved left one position. It sends a ^G (control-G) when pressed.

LINE INS will insert a new line at the current cursor position, moving all text on the line from the cursor to the end of the line, along with all subsequent lines, down one position. It does this by sending a ^N (control-N) when pressed.

LINE DEL will delete the entire line the cursor is on, afterwhich all subsequent lines will be moved up one row. It generates a ^Y(control-Y) when pressed.

When not in WordStar, the function performed by the keys is dependent upon the applications program being run.

Operation of the Edit keys in Block Mode is as follows:

CHAR INS causes the character under the cursor and all following characters to move one position to the right. The character insert operation terminates at the end of the line, or first protected field if Protect Mode is set, and the last character on the line is lost. A space character is written under the cursor.

CHAR DEL deletes the characters under the cursor and moves all characters that follow on the line, or first protected field if Protect Mode is set, to the left. A space is written in the last character position of the line or field.

LINE INS causes the entire line the cursor is in to move down one line as well as all lower lines. The bottom line of the display scrolls off and is lost. The cursor moves to the beginning of the line created which is filled with spaces. If Protect Mode is set, no operation is performed.

LINE DEL erases the line containing the cursor and moves all lower lines upward one line. The cursor moves to the beginning of the first line that moves upward. The bottom line of the display is filled with spaces. If Protect Mode is set no operation takes place.

3.3.7 Transmission Keys

Two types of data transmission may be initiated from the keyboard - a Send Page Unprotected and a Page Print, as follows:

ENTER will cause the unprotected data from home to the cursor position to be transmitted out the Main Port if Block Mode and Protect Mode are set. If Protect Mode is not set, all data from home to the cursor position will be sent. If Conversation Mode is set, then the ENTER key generates a CR (0D Hex) code only and no block transmission takes place.

COPY causes the data from home to the cursor position to be output to the Auxiliary Port device, usually a printer. At the end of each line transmitted,the Morrow Terminal automatically inserts a CR (0D Hex) and LF (0A Hex) code in the output data. The Auxiliary Port must be enabled in Set-Up Mode for the operation to take place.

3.3.8 Function Keys

The seven function keys, F1 thru F7, transmit a single control character. The keys perform no local operation and are used as special commands to be interpreted by the computer for particular system operations. The keys and each associated transmit sequence are as follows:

		ASCII NAME	HEX CODE
F1	=	SOH	01H
F2	=	STX	02H
F3	=	ETB	17H
F4	=	EOT	04H
F5	=	ENQ	05H
F6	=	CAN	18H
F7	=	SUB	1AH

3.3.9 Special Operation Keys

The keys listed below perform special operations or have a unique effect on the Morrow Terminal.

SET-UP key causes the Morrow Terminal to enter Set-Up Mode when pressed, as described in paragraph 2.5.2. Pressing the key again exits Set-Up Mode.

SAVE is active only when the terminal is in Set-Up Mode. Pressing the key causes the current set-up functions to be saved in non-volatile memory. The saved selections are used to establish the power-on or reset configuration of the Morrow Terminal. The SAVE key has no effect when not in Set-Up Mode.

BREAK causes a break (mark) condition to be presented on the transmit data line of the Main Port for approximately 300 milliseconds. This operation has no effect on the terminal and is usually used for control signaling to the computer device.

ESC generates a special control code (1B Hex), usually followed by one or more characters, used for command operations. Thus, ESCape is usually considered as a "Lead-In" character for terminal control operations. Paragraph 3.4 and Table 3-2 detail the ESCape sequence utilized by the Morrow Terminal.

3.4 CONTROL CODES AND ESCAPE SEQUENCES

3.4.1 Control Codes

The operational characteristics of the Morrow Terminal are controlled, in part, by a group of control codes which may originate at the computer or at the keyboard. Control codes are not displayed unless Program Mode is set. In that case the Morrow Terminal will display, but not act upon, the recognized control code. Of the 32-ASCII standard control codes available for use, the Morrow Terminal utilizes the control codes listed in Table 3-1.

3.4.2 Escape Sequences

An ESCape sequence is formed by executing the ESC ASCII control code, followed by one or more otherwise displayable ASCII characters. Each ESCape sequence controls a specific terminal operation. Some operations are one-time only, others remain operative for as long as power to the unit is not interrupted or until terminated by a control code or ESCape sequence.

Table 3-2 shows the ESCape sequences used by the Morrow Terminal, whether initiated from the computer or the keyboard. ESCape sequences may be initiated from the keyboard using the ESC key during Conversation Mode or Block Mode operations, as follows:

Conversation Mode, Full Duplex - ESC is transmitted directly to the computer and is utilized by the Morrow Terminal only when echoed back by the computer.

Conversation Mode, Half Duplex - ESC is transmitted and acted upon locally by the Morrow Terminal.

Block Mode - each ESC sequence is immediately acted upon by the Morrow Terminal, unless program mode is set. If embedded in memory, the ESC sequence will be displayed but not acted upon, and will be transmitted, along with the block of data.

Table 3-1
Control Codes Utilized by the Morrow Terminal

OPERATION	HOW TO EXECUTE FROM CPU	FROM KEYBOARD	HEX CODE	DESCRIPTION
Bell	BEL	CONTROL G	07	Sounds the audible alarm. (If margin bell enabled in set-up.)
Backspace	BS	← BACKSPACE or CTRL H	08	Moves the cursor to the left one character position. The cursor moves to the last position of the previous line when at the first character position of the line.
Tab	HT	TAB or CTRL I	09	Moves the cursor to the next tab stop - Beginning of the next unprotected field if protect mode is set, to every eighth character position (modulo 8 column tabs) if protect mode is reset. (Same as ESC I)
Line Feed	LF	↓ or CTRL J	0A	Moves the cursor to the next line down in the same column. If the cursor is located on the last line, a scroll operation will be performed, if enabled.
Upline	VT	↑ or CTRL K	0B	Moves the cursor to the previous line up in the same column. If the cursor is located on the first line, no operation takes place.
Forespace	FF	→ or CTRL L	0C	Moves the cursor to the right one character position. The cursor moves to the first position of the next line, when at the last character position of a line.
Carriage Return	CR	RETURN* or CTRL M	0D	Moves the cursor to the first character position of the current line.

Table 3-1 (Continued)
Control Codes Utilized by the Morrow Terminal

OPERATION	HOW TO EXECUTE FROM CPU	FROM KEYBOARD	HEX CODE	DESCRIPTION
Keyboard Enable	SO	CTRL N *	0E	Allows data to be entered on the keyboard - keyboard unlock (*from computer only if keyboard is already locked). (Same as ESC ")
Keyboard Disable	S1	CTRL O	0F	Prevents data from being entered on the keyboard - keyboard lock. (Same as ESC #) Auto line feed is disabled.
Reset Auxiliary Port with/without Display	DC4	CTRL T	14	When printing through auxiliary port, with/without display will continue until the buffer is empty.
Clear all to Spaces	SUB	CTRL Z	1A	Erases the display to spaces, and moves the cursor to the Home position.
Escape	ESC	ESC or CTRL [	1B	Recognized by the Morrow Terminal as a code extension character which must be followed by otherwise displayable character or characters to invoke a specific terminal operation.
Home Cursor	RS	HOME or CTRL^	1E	Moves the cursor to the first character position of the first line of the display.
New Line	US	RETURN * or CTRL _	1F	Moves the cursor to the first character position of the next line (*when auto line feed is enabled)

Table 3-2
Morrow Terminal Escape Sequences

(Operations which have an * beside them are also selectable in set-up mode.)

COMMAND	ESCAPE SEQUENCE	HEX CODE	DESCRIPTION
Keyboard Unlock	ESC "	1B 22	Enables data entry from the keyboard. (Same as SO) (Hitting SET-UP twice will unlock the keyboard.)
Keyboard Lock	ESC #	1B 23	Disables data entry from the keyboard.
Set Protect Mode	ESC &	1B 26	Causes protect mode to be entered, highlighted (write-protected) data is reserved (protected) during certain editing and transmit operations.
Reset Protect Mode	ESC '	1B 27	Causes protect mode to be exited.
Reset Write Protect	ESC (	1B 28	Causes write protect to be terminated.
Set Write Protect	ESC)	1B 29	Causes all subsequent data to be entered as write protected. Data will be highlighted by the protected field visual attribute selected in the set-up field. Data will not be "protected" , however, unless protect mode is set.
Clear all to Null	ESC *	1B 2A	Causes all display data to be cleared to nulls protected or not, and the cursor moves home.
Clear Unprotected to Spaces	ESC +	1B 2B	Causes only unprotected data on display to be cleared to spaces, cursor moves home. If protect mode is not set, all data is cleared. (Same as ESC ;)

Table 3-2 (Continued)
Morrow Terminal Escape Sequences

(Operations which have an * beside them are also selectable in set-up mode.)

COMMAND	ESCAPE SEQUENCE	HEX CODE	DESCRIPTION
Load Default Status Line	ESC 0	1B 30	Causes the diagnostic test mode to be entered.
Send Line	ESC 4	1B 34	Transmits the unprotected data in the line containing the cursor, starting at the beginning of the line and up to the cursor position.
Send Page-Unprotected	ESC 5	1B 35	Transmits the unprotected data on the display starting at home and through to the cursor position. A CR (code 0D Hex) is transmitted at the end of the block.
Send Line-All	ESC 6	1B 36	Transmits all data in the line containing the cursor starting at the beginning of the line and up to the cursor position.
Send Page-All	ESC 7	1B 37	Transmits all data on the display beginning at home and continuing through to the cursor position.
Clear Unprotected to Spaces	ESC ;	1B 3B	Causes the unprotected data on the display to be cleared to spaces and the cursor to be moved to the home position. (Same as ESC +)
Address Cursor	ESC=(X^1X^2)	1B 3D (20-6F) (20-37)	Used to position the cursor to a specified row and column on the display. The location is expressed as two ASCII characters. The first (X^1) specifies the column coordinate (20-6F Hex). The second (X^2) specifies the row (20-37 Hex). Refer to Fig. 3-2.

Table 3-2 (Continued)
Morrow Terminal Escape Sequences

(Operations which have an * beside them are also selectable in set-up mode.)

COMMAND	ESCAPE SEQUENCE	HEX CODE	DESCRIPTION
Read Cursor	ESC ?	1B 3F	Causes the terminal to transmit the cursor row and column position in the same format as described in "Address Cursor" Command. Column position is transmitted first, followed by the row position.
Enable Auxiliary Port with Display	ESC ,	1B 2C	This command causes all data received by the primary port to be displayed and/or acted upon, and transmitted to the auxiliary port device. In conversation/half duplex mode, keyboard entries are also transmitted.
Set Block Mode*	ESC B	1B 42	Cancels conversation mode and causes block mode to be entered. Refer to para. 3.2.2 for details of block mode operation.
Set Conversation*	ESC C	1B 43	Cancels block mode and causes conversation mode to be entered. Refer to Paragraph 3.2.2 for details of conversation mode operation.
Insert Line	ESC E	1B 45	Causes a line of spaces to be inserted at the line containing the cursor. All lower lines scroll down one line, the bottom line being lost. No action takes place if protect mode is set.
Back Tab	ESC I	1B 49	Moves the cursor to the beginning of the previous unprotected field if protect mode is set; to the left eight character positions (modulo 8 tab) if protect mode is reset.

Table 3-2 (Continued)
Morrow Terminal Escape Sequences

(Operations which have an * beside them are also selectable in set-up mode.)

COMMAND	ESCAPE SEQUENCE	HEX CODE	DESCRIPTION
Set Monitor Mode*	ESC A	1B 41	When set, all received data will be displayed as hexa-decimal ASCII pairs, 00-7F.
Print Page-All	ESC P	1B 50	Causes all data from home up to the cursor position to be transmitted to the auxiliary port device, a CR and LF code (0D and 0A Hex) are added at the end of each line as it is sent. (Pressing [PRINT] on keyboard performs the same function.)
Insert Char-acter	ESC Q	1B 51	Moves all data from the cursor position to the end of the line or protected field one position to the right. A space is written at the cursor position.
Delete Line	ESC R	1B 52	Erases the line containing the cursor and moves all lower lines upward one line. No action takes place if protect mode is set.
Erase to End-of-Line Unpro-tected	ESC U	1B 55	Erases the unprotected data from the cursor position up to the end of the line or protected field.
Delete Character	ESC W	1B 57	Deletes the character under the cursor and moves all characters from the cursor to the end of the line or protected field to the left one position.
Erase to End-of-Page Unprotected	ESC Z	1B 5A	Erases the unprotected data from the cursor position up to the end of the display or protected field.

Table 3-2 (Continued)
Morrow Terminal Escape Sequences

(Operations which have an * beside them are also selectable in set-up mode.)

COMMAND	ESCAPE SEQUENCE	HEX CODE	DESCRIPTION
Enable Auxiliary Port without Display	ESC -	1B 2D	This command causes all data received by the primary port to be transmitted to the auxiliary port device. No data are sent to the display.
Erase to End-of-Line All	ESC T	1B 54	Erases all data from the cursor position up to the end of the line.
Erase to End-of Page All	ESC Y	1B 59	Erases all data from the cursor position up to the end of the display.

3.5 DATA TRANSMISSION

Data entered from the keyboard may be transmitted to your computer either character-by-character as during Conversation Mode operation, or in message blocks, as during Block Mode operation. Transmission is serial asynchronous, with an ASCII character format of 1 start bit, 7 or 8 data bits, odd/even, or no parity bit and 1 or 2 stop bits. The word structure and baud rate used are selectable in Set-Up Mode. Main Port communications are via a bi-directional RS-232C interface as detailed in Section II. Auxiliary Port communication is uni-directional via an RS-232C interface, also detailed in Section II.

Data communications can take place whenever the Morrow Terminal is placed in On-Line Mode. When receiving data the Morrow Terminal has an X-ON/X-OFF busy indication feature used to command the computer to suspend transmission to prevent data loss.

3.5.1 Conversation Mode Characteristics

When the terminal is operating in Conversation Mode, characters entered on the keyboard are immediately transmitted to the computer. This includes any control codes or ESCape sequences which are normally not displayed. If Full Duplex Mode is set, then only those codes echoed by the computer will be displayed or cause any action to take place.

3.5.2 Block Mode Characteristics

During Block Mode operation, data entered on the keyboard is routed only to the display or acted upon for command sequences utilized by the Morrow Terminal. This allows complete display editing and formatting prior to transmission to the computer. By setting Program Mode, control codes may also be embedded in the display for transmission. A block of data can be transmitted in whole or in part by the use of the Protect Mode feature. This allows the computer the ability to send a form to the terminal which is Write-Protected. When Protect Mode is set, data the operator enters is transmitted only when commanded. Block Mode commands may be used to cause the terminal to transmit a line or page, unprotected only, or all of the data. Received data is accepted conversationally or in blocks, regardless of the mode selected.

3.5.3 X-ON/X-OFF (Busy/Ready Status)

The Morrow Terminal has the ability to signal the computer of a potential data loss if the printer buffer is nearly full or the terminal is otherwise unable to accept data. The X-ON/X-OFF feature may be enabled or disabled through Set-Up Mode. When enabled the terminal will transmit an X-OFF code (DC3-13 Hex, Control S) to the computer if the input buffer has fewer than 256 character locations remaining. An

X-ON code (DC1-11 Hex, Control Q) will be transmitted when there are 1024 locations available in the input buffer. Using the Page Print function or the Pass-through Print with low speed printers will also cause the X-ON/X-OFF commands to be issued when appropriate. Busy/Ready condition is sensed on the Auxiliary Port via one of the RS-232C signal levels. The CP/M operating system will recognize these X-ON/X-OFF codes and stop the transmission when requested by the terminal.

3.6 CURSOR CONTROL

3.6.1 Relative Cursor Positioning

The Cursor may be moved to any position on the screen using the separate cursor control keys. Its position signifies the next character position in the display. When data is being entered, the cursor moves one position to the right on the line or to the first position in the next line each time a character is written. The control codes required to control the cursor position are outlined in Table 3-1.

3.6.2 Absolute Cursor Positioning

Absolute Cursor Addressing requires commanding the cursor to a specific display location. Commanding the cursor to a specific location (loading the cursor) is normally executed by the computer. The Load command is executed by means of an ESCape sequence in which the row and column location of the cursor is expressed in a pair of ASCII characters.

3.6.2.1 Load Cursor Operation

When the Load Cursor operation is initiated the cursor moves to the commanded position. The Load Cursor operation codes required are as follows:

```
ESC = COL        ROW

    ASCII      ASCII
      |          |
      |          └ASCII Character associated with
      |            row (1-24) position.
      |
      └ASCII Character associated with cursor
        column (1-80) position.
```

EXAMPLE: "ESC=1/" commands the cursor to Column 18, Row 16.

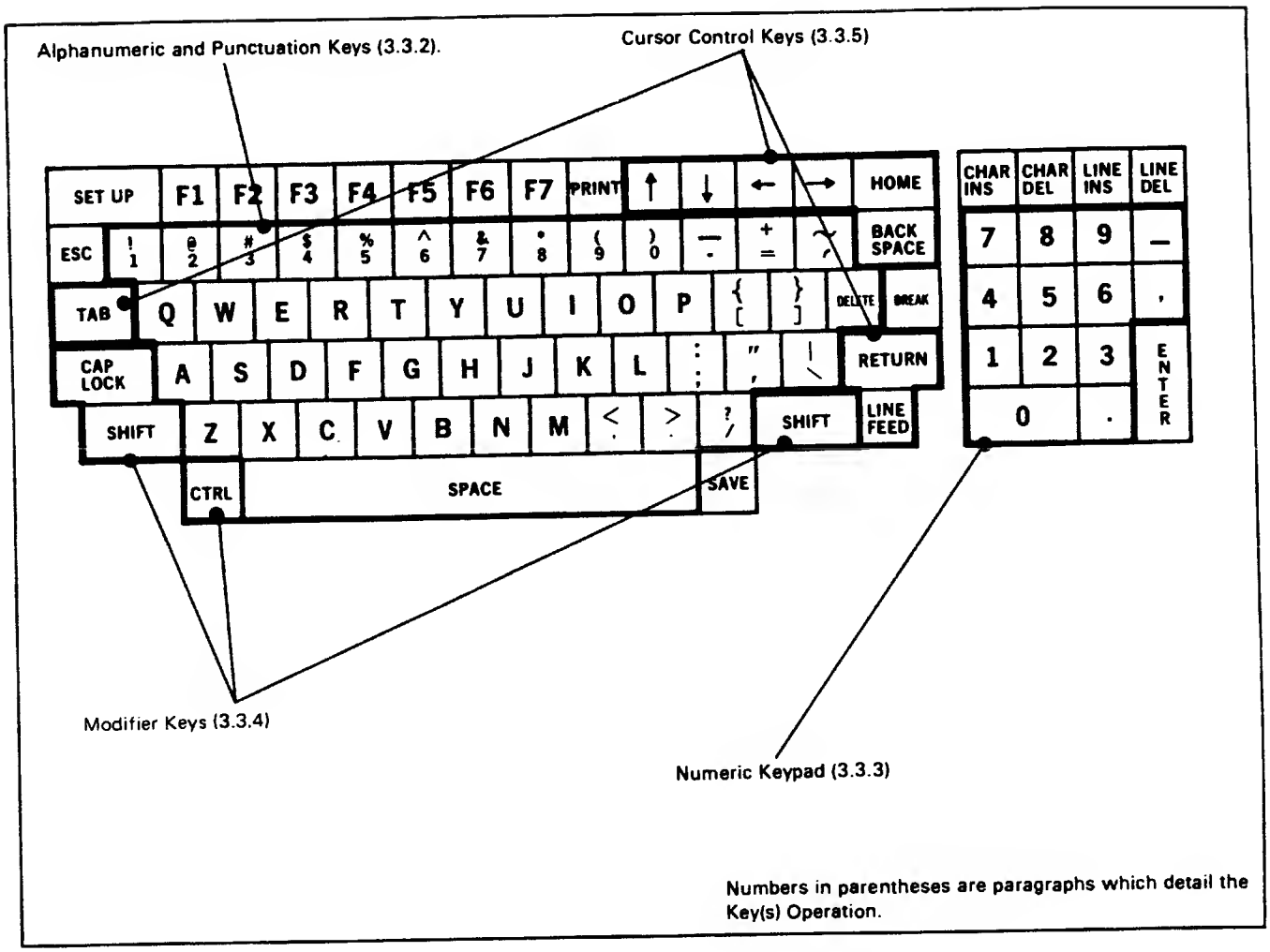

Figure 3-1. Morrow Terminal Keyboard Functions

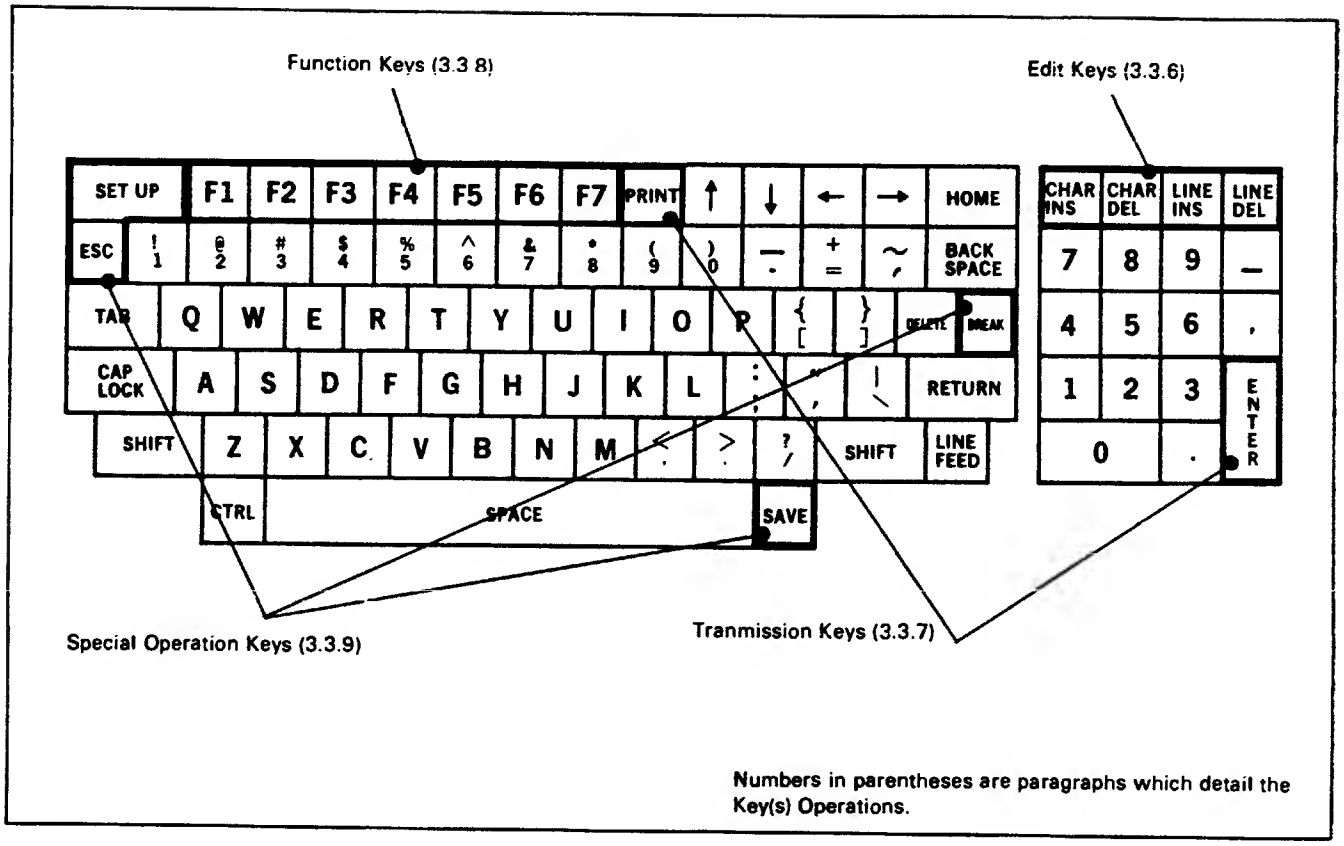

Figure 3-1. Morrow Terminal Keyboard Functions

3.6.3 Tab Control

The Morrow Terminal supports two types of tab operations: Modulo tabs and Protected Field tabs. The tab and back-tab commands are detailed in Tables 3-1 and 3-2. The type of tab performed depends upon whether Protect Mode is set or reset. When Protect Mode is set, the Tab command will cause the cursor to advance to the beginning of the next unprotected field. If no protected fields are encountered by the end of the display, the cursor moves home, or to the first unprotected position if home is protected. When Protect Mode is reset the cursor will advance or backspace by eight character positions (Modulo 8 tab) for each command received.

3.6.4 Scrolling

In the Morrow Terminal, data is entered into display memory starting at the HOME position, and continues through Position 80 or Line 24, (last data position). When Position 80 is filled, or when a New Line or Line Feed occurs in Line 24, the display is shifted upwards one line and data entry continues in Position 1 of the new Line 24. The original top line of the display is lost. Scrolling continues indefinitely. Scrolling may be enabled or disabled through a selection in Set-Up Mode. Scroll is automatically disabled when Protect Mode is set.

3.7 DISPLAY FORMATTING OPERATIONS

The Morrow Terminal may have various attributes and fields used to highlight data on the display. The visual and field attributes used for display formatting are discussed in the paragraphs that follow.

3.7.1 Visual Attributes

There are four Visual Attributes that can be assigned to any character on display. They include: Blink, Underline, Reversed, and Reduced Intensity. The attribute that will be used is assigned singularly or in combination through a set-up function selection. When the "Set Write Protect" command is received all subsequent data entered will appear with the selected attribute. If Protect Mode is not set, the data is not treated uniquely; it may be overwritten and erased or cleared by all associated commands. If Protect Mode is set, the data is treated as protected.

3.7.2 Field Attributes

When the "Set Write Protect" command is received all subsequent data takes on the visual attribute as noted in paragraph 3.6.1, until a Reset Write Protect is issued. By setting Protect Mode, the write protected data is treated as reserved, or protected. This will allow the commands that specify "Unprotected Only" to be used to improve throughput characteristics. In block sends, the protected data will not be sent during "Send Unprotected Only" commands for line or page. During Edit operations the Erase or Clear Unprotected Only commands will leave the protected data on the display. Insert and Delete operations will terminate upon encountering a protected field. Scrolling is also disabled when Protect Mode is set.

3.8 SET-UP MODE OPERATIONS

The general operating characteristics of the Morrow Terminal are controlled by ten 4-bit "nibbles" of information that is displayed on the 25th line of the display, when Set-Up Mode is entered. Both the operator and computer have the ability to change the functions selectable in Set-Up Mode. Selections may be saved in non-volatile memory to re-establish the same functions on the next power-on cycle or terminal reset operation. The operation of Set-Up Mode is fully described in paragraph 2.5.2.

3.9 PRINT OPERATIONS

The Auxiliary Port of the Morrow Terminal is most typically connected to a serial RO printer. The communications of data to the auxiliary device is uni-directional via an RS-232C interface. A Busy/Ready signal level is monitored for status during print operations. The Auxiliary Port may be enabled or disabled through a function setting in Set-Up Mode. The three types of print output are: Page Print, Auxiliary Port with Display, and Auxiliary Port without Display, details as follows:

3.9.1 Page Print

Upon receipt of a Print Page command the Morrow Terminal will transmit data from home up to the cursor position to the auxiliary device. The command may either specify to send all data, or, send the unprotected data normally but the protected data as spaces. This is useful when using a formatted screen being output to a pre-printed form. The Print Page commands can be generated from the computer or keyboard. Each print line output is followed by a CR and LF (OD and OA Hex) in the data stream.

3.9.2 Auxiliary Port With Display

Auxiliary Port with display is enabled or disabled by entering a command from the keyboard or by receiving the ESCape sequence from the computer. When using this method of transmission the terminal will display and act upon all received data as well as transmitting the data out the Auxiliary Port to the printer. When operating in Conversation Mode Half-Duplex keyboard entries are also output to the printer.

3.9.3 Auxiliary Port Without Display

Auxiliary Port without display is enabled or disabled by entering command from the keyboard or by receiving command from the computer. When operating in this mode, the terminal will not display received data, however, the terminal will transmit the received data out the Auxiliary Port to the printer. No commands except the reset Auxiliary Port with/without display are acted upon.

3.10 POWER-ON RESET

A Power-On Reset consists of a complete recycling of the Morrow Terminal functions, including power. This is accomplished by setting the ON/OFF switch to OFF, waiting 10 seconds, then setting the switch to ON. All display and other volatile memory is erased when powering down. Upon power up, the unit is subject to the complete Power Turn-On procedure specified in Section II.

3.11 SELF-TEST

When the Morrow Terminal is reset the terminal Self-Test will be executed. Self-Test will verify the integrity of the display memory, the program memory, non-volatile memory and the associated internal control logic. Upon completion of Self-Test the terminal will sound the audible alarm and the cursor will appear in the upper left corner of the screen.

SECTION IV
THEORY OF OPERATION

4.1 GENERAL DESCRIPTION

This section contains theory of operation information for the MDT 20 Video Display Terminal.

4.2 FUNCTIONAL DESCRIPTION

The MDT 20 is a microprocessor-based video display terminal which communicates with a host computer. The terminal allows the user to do limited text processing at the display area.

The MDT 20 is composed of a monitor assembly, power supply, and an electronic keyboard circuit board-keyboard assembly. A microcomputer (MPU), video logic and control, and keyboard logic are included in the electronic circuit board.

There are six functional sections in the MDT 20 plus the monitor and power supply. Section 6 contains the theory of operation for the monitor and for the power supply. Listed below are the six functional sections:

1. CPU – contains the system clock, Z8 MPU, system timing control logic, and address decoders.
2. External interface – contains interface logic for the MODEM port, CURRENT LOOP port, and AUXILIARY port.
3. Keyboard – contains keyboard matrix and keyboard timing logic.
4. Memory – contains 4K of system ROM, 2K of system RAM, and an EPROM for storing set-up information.
5. Video display – contains display RAM, CRT control, and character generation logic.

4.3 THEORY OF OPERATION

4.3.1 Introduction

This section provides a functional description of the MDT 20 circuitry. The logical functions are first described at the system level, then individual circuit descriptions using detailed block diagrams are presented.

4.3.2 System Functional Description

The MDT 20 functional block diagram is shown in **figure 4-1**.

Data to be displayed on the CRT is either entered from the keyboard or sent to the terminal from the host computer.

If data is entered from the keyboard, it is placed on the Data Bus (DB0-DB7), and sent to the CPU section. From the CPU section, the data is sent to the Video section over the RAM Data Bus (RD0-RD7) where it is written into Display RAM.

The CPU section causes the contents of the Display RAM to be periodically displayed on the screen.

Data sent to the MDT 20 from the host computer is routed from the External Interface section to the CPU section. The data is displayed on the CRT in the same manner as if it were entered from the keyboard.

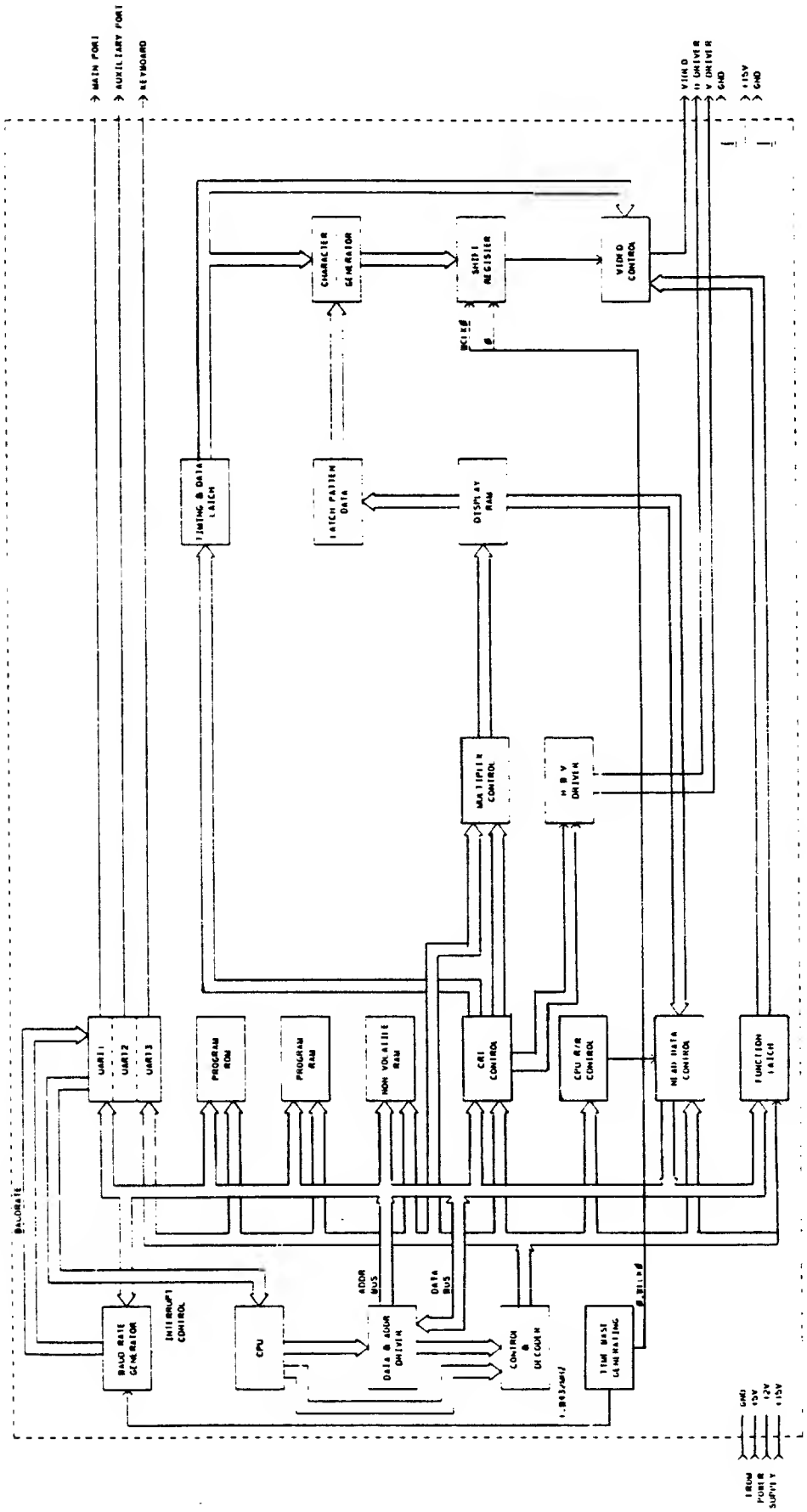

Figure 4-1. **MDT 20** *Functional Block Diagram*

The **MDT 20** transmits data by retrieving the data from the Display RAM and routing it to the CPU section over the RAM Data Bus (Block Mode). From the CPU section, the data is sent to the External Interface section where it is output from one of the interface ports.

CPU Section

The CPU section contains the 8085 MPU and associated address logic, as well as the two-phase (02) clock. The CPU section performs all the addressing and logic functions of the **MDT 20**. The CPU section also contains circuitry for address decoding.

External Interface Section

The External Interface section contains the circuitry to interface the **MDT 20** with RS-232-C point-to-point signals, 20mA current loop signals, and modem logic. Logic for an RS-232-C auxiliary port, allowing an asynchronous serial RO printer to be used with the **MDT 20**, is also included.

Keyboard Section

The keyboard section contains the logic necessary to interface the keyboard with the **MDT 20**. This includes the 96 key switches in the keyboard matrix and an MM57499 SKI for strobing the keyboard matrix and transmitting serial data to the Keyboard interface circuitry.

System Memory Section

The Memory section of a standard **MDT 20** contains 4K of Read Only Memory (ROM), 2K of Random Access Memory (RAM), and 64 nibbles (256 bits) of Electrically Alterable Programmable Read Only Memory (EAPROM). The 4K of ROM contains program which allow the **MDT 20** to perform its various functions. The 2K of RAM is used as system scratchpad memory and as a receive and transmit buffer. The 64 nibbles of EAPROM are determined by the user in the system set-up.

Video Section

The Video section contains the display logic needed to drive the Cathode Ray Tube (CRT). This block also contains 2K of Display RAM and the character generation circuits, as well as the Video logic and monitor.

4.4 CPU SECTION

A block diagram of the CPU section is shown in **figure 4-2.**

4.4.1 CPU Section Overview

The CPU section contains logic to produce the timing signals and control all data operations in the **MDT 20**.

Timing signals for the **MDT 20** are produced by the 02 clock. This signal is used to control the 8085 MPU and other data transfer operations in the **MDT 20**.

The MPU receives data on the Data Bus (DB0-DB7) and performs data manipulation operations whose results are output on AD0-AD7 and AD8-AD15.

AD0-AD7 are used for addresses or data depending on the current T state (T states are discussed later). Thus, AD0-AD7 are placed on the Address Bus (AB0-AB7) or the Data Bus (DB0-DB7).

A8-A15 are placed on the Address Bus (AD8-AB15).

The Address Bus (AB0-AB15) is used throughout the **MDT 20** (System RAM, ROM, EAPROM, etc.) to address memory reads and writes.

The Data Bus (DB0-DB7) is used for passing data between the 8085 MPU and the rest of the system (System RAM, ROM, CTRC, etc.).

Note

See **Appendix A** *for a list of mnemonics used throughout the* **MDT 20.**

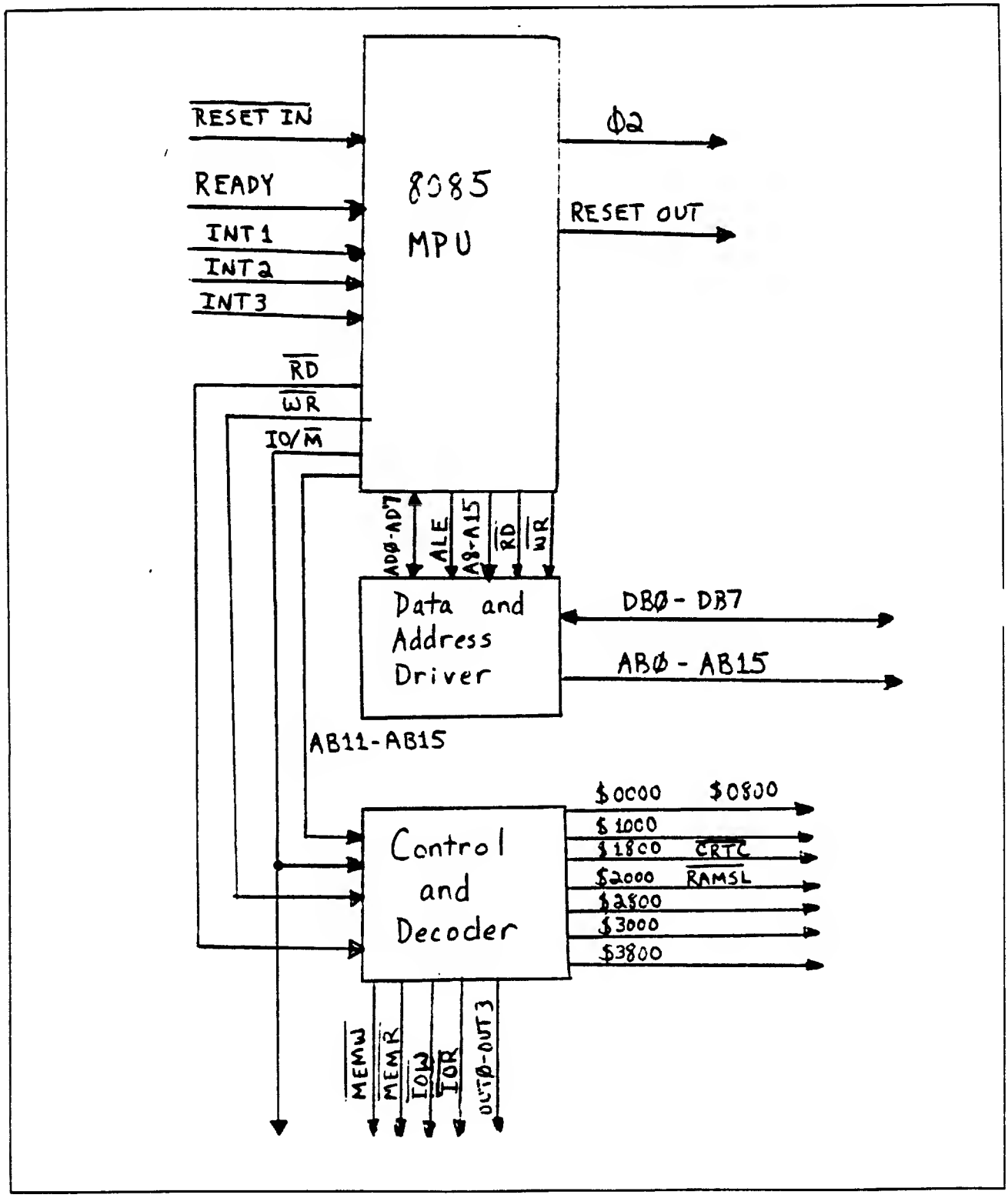

Figure 4-2. CPU Section Detailed Block Diagram

4.4.2 8085 MPU A26 (Schematic P1)

The MDT 20 incorporates an 8085 MPU to control all addressing and data functions.

A block diagram of the 8085 MPU is contained in **figure 4-3.**

Clock signals X1 and X2 provide the timing for the MPU. X1 and X2 are attached to a quartz crystal which oscillates at 6.144 MHz. These two signals are divided by 2 to produce the 3.072 MHz timing signal that is used internally by the MPU.

AD0-AD7 are used for addresses or data depending on the current T state (see **figure 4-4** for an explanation of T states). During the first clock cycle (T state) of a machine cycle, AD0-AD7 contain the 8 least significant bits (LSB) of the memory or I/O addresses. These 8 bits are output signals that are clocked through the Address Bus Latch A27 and onto the Address Bus (AB0—AB7).

During the second and third clock cycles (T states) of a machine cycle, AD0-AD7 contain 8 bits of data that are being sent to or received from the Data Bus (DB0-DB7). The Data Bus Buffer A19 is the interface between the 8085 MPU and the Data Bus. The 8085 MPU sends data to the Video section, the modem port, and auxiliary port, or the CRTC depending on the current operation. The MPU receives data from the keyboard which is sent to the Video section to be displayed on the CRT.

A8-A15 are output signals that contain the 8 most significant bits (MSB) of a memory or I/O address. A8-A15 are passed through the Address Bus Buffer A28 to the Address Bus (AB8-AB15). The Address Bus (AB0-AB15) is sent to the Memory section, Video section, and External Interface section.

The following status and enable signals are received or transmitted by the 8085 MPU.

$\overline{\text{RSTIN}}$ ($\overline{\text{RESET IN}}$) is the signal that produces the initial reset during system power up. During normal operations, RESET IN is high, but when it goes low at power up time, the following occurs:

1. The program counter (P.C.) is set to zero.
2. The interrupt enable flip-flop is reset.
3. The data bus, address bus, and control lines are set to their high impedance states.
4. The MPU sends the RESET OUT signal to the rest of the **MDT 20** for initialization purposes.

Three input signals (RST 5.5, RST 6.5, and RST 7.5) are RESTART signals that are received from the keyboard, auxiliary, and modem (EIA) USARTs, respectively.

When RST 5.5 goes high, it indicates that a key in the keyboard matrix has been depressed. This causes an internal RESTART to occur at address 2C (hex) in the MPU. Prior to going to address 2C (hex) the contents of the P.C. are pushed onto the stack. RST 5.5 has the lowest priority of the three RESTART signals.

When RST 6.5 goes high, it indicates that the printer is busy. The contents of the P.C. are pushed onto the stack and an internal RESTART occurs at address 34 (hex) in the MPU. RST 6.5 has a higher priority than RST 5.5.

When RST 7.5 goes high, it indicates that the modem USART has data that is ready to be fetched by the MPU. The contents of the P.C. are pushed onto the stack and an internal RESTART occurs at address 3C (hex) in the MPU. This signal has a higher priority than RST 6.5 or RST 5.5.

VCC provides a +5 volts power supply to the MPU.

READY is an input signal which, when high during a read or write cycle, indicates that the memory or I/O device is ready to send or receive data. When READY is low during a read or write cycle, the MPU waits an integral number of clock cycles for READY to be set high before completing the read or write cycle.

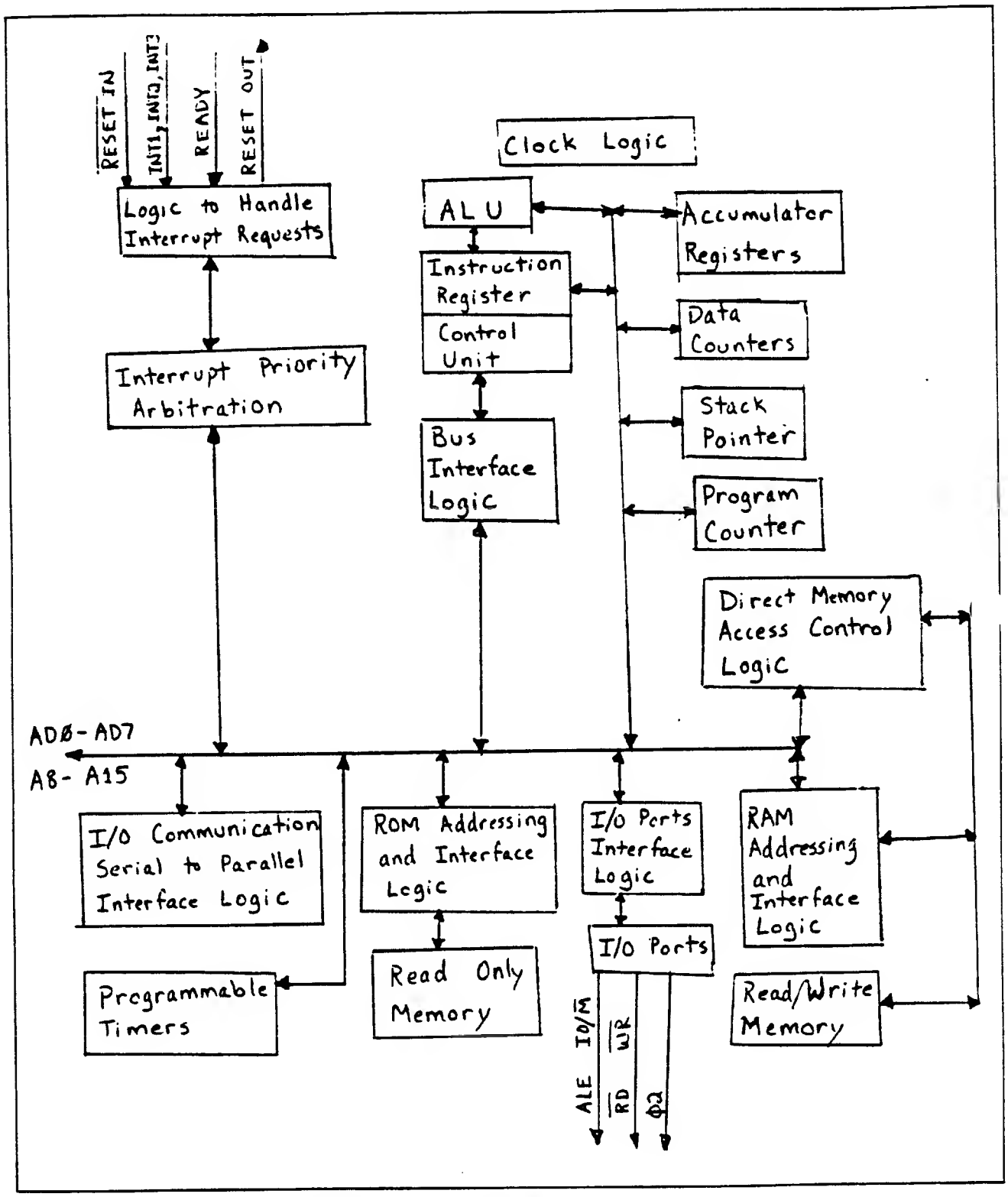

Figure 4-3. Block Diagram of 8085 MPU

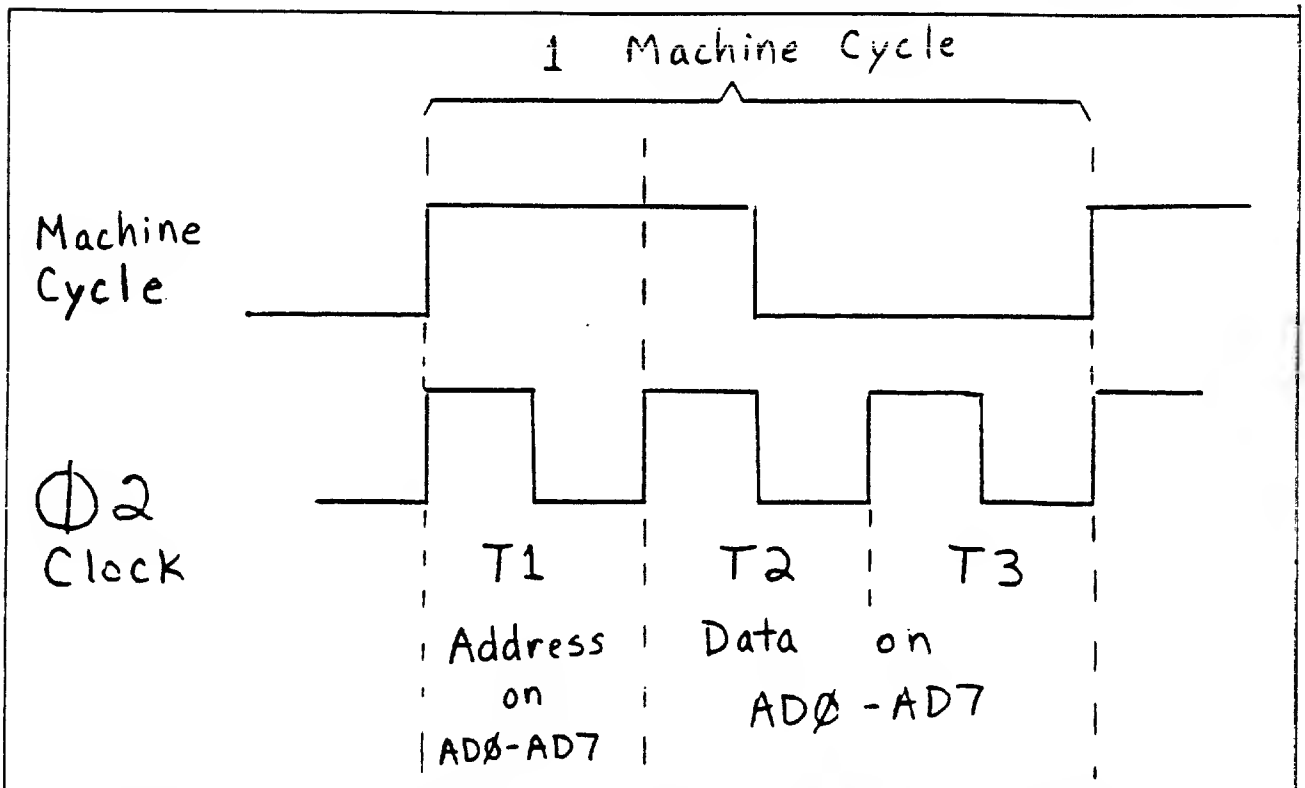

One machine cycle has three T states. During the first T state (T1), Address Data lines (AD0-AD7) contain address bits which are placed on the Address Bus (AB0-AB7). During the second and third T states (T2 and T3), Address Data lines (AD0-AD7) contain data bits which are placed on the Data Bus (DB0-DB7).

Figure 4-4. T States

READY is a product of the $\overline{\text{RAMSL}}$ ($\overline{\text{RAM SELECT}}$), 02 (phase two) clock, and HSYNC (HORIZONTAL SYNCHRONIZE) signals. 02 clocks $\overline{\text{RAMSL}}$ through D flip-flop A35. When both $\overline{\text{RAMSL}}$ and HSYNC are high, READY is high; otherwise READY is low. This means that a memory or I/O read or write may occur during horizontal retrace time (see **Section 4.8**).

ALE is an output signal that goes high during every T1 state and is low during T2 and T3 states. ALE is used to clock AD0-AD7 through the Address Bus Latch A27 and onto the Address Bus AB0-AB7.

IO/$\overline{\text{M}}$ (INPUT-OUTPUT/$\overline{\text{MEMORY}}$) is an output signal that indicates whether a read or write is to be to or from I/O or memory. When IO/M is high, the MPU is reading from or writing to I/O. When low, the MPU is reading from or writing to memory.

$\overline{\text{RD}}$ ($\overline{\text{READ}}$) is an output signal which, when low indicates that the data in the selected memory or I/O device is to be read to the Data Bus.

$\overline{\text{WR}}$ ($\overline{\text{WRITE}}$) is an output signal which, when low, indicates that the data on the Data Bus is to be written into the selected memory or I/O location. All data is set up at the trailing edge of this signal.

IO/$\overline{\text{M}}$, $\overline{\text{RD}}$, and $\overline{\text{WR}}$ are sent to the 2-to-4 decoders A41 to determine the type of device

(I/O or memory) and the type of operation (read or write) that is to be performed.

CLK (CLOCK) is an output signal that is used as the phase two (02) clocking signal. This signal is sent to the CRT Controller (CRTC) in order to enable the timing between the CRTC and the MPU. CLK oscillates at 3.072 MHz (the internal clocking signal for the MPU).

RST (RESET OUT) goes high to indicate that the MPU is being reset. RST must be held high for 3 clock cycles (1 machine cycle) in order for the MPU to reset the rest of the MDT 20 system.

4.4.3 Data and Address Driver A27, A28, A19 (Schematic P1)

The Address Bus Buffer A28 and Address Bus Latch A27 pass addresses from the MPU (AD0-AD7, A8-A15) to the Address Bus (AB0-AB15). Addresses are passed through the buffer and latch only during T1 states of each machine cycle.

The 8 most significant bits are passed through the Address Bus Buffer from A8-A15 to AB8-AB15. The enabling signals ($\overline{G}$) are always held low.

The 8 least significant bits are clocked through the Address Bus Latch from AD0-AD7 to AB0-AB15. The enabling signal ($\overline{G}$) is always held low. The clocking signal (CLK) goes high during every T1 state causing AD0-AD7 to be passed to AD7.

The Data Bus Buffer A19 passes data between the MPU (AD0-AD7) and the Data Bus (DB0—DB7). The MPU clocks data to or from the Data Bus.

DIR determines the direction in which the data flows. When DIR goes low, data is read from a memory or I/O device to the MPU. When DIR goes high, data is written from the MPU to a memory or I/O device.

$\overline{G}$ is the enable signal for the Data Bus Buffer. $\overline{G}$ goes low during T2 and T3 states of every machine cycle to enable the chip for reads or writes.

4.4.4 Control and Decoder A41, A42 (Schematic P1)

Two 2-to-4 decoders A41 produce the signals that enable memory and I/O device reads and writes. The two decoders use input signals $\overline{WR}$ WRITE, IO/$\overline{M}$ (INPUT- OUTPUT/ $\overline{MEMORY}$) and AB5-AB6 (Address Bus) from the MPU to produce the following output signals.

$\overline{MEMW}$ ($\overline{MEMORY\ WRITE}$) goes low when $\overline{WR}$ and IO/$\overline{M}$ are both low. This indicates that the data from the MPU is to be written into memory at the location specified by the Address Bus.

$\overline{MEMR}$ ($\overline{MEMORY\ READ}$) goes low when $\overline{WR}$ is high and IO/$\overline{M}$ is low. This indicates that the data from the specified memory location is to be placed on the Data Bus and read by the MPU.

$\overline{IOW}$ ($\overline{INPUT/OUTPUT\ WRITE}$) goes low when $\overline{WR}$ is low and IO/$\overline{M}$ is high. This indicates that the data from the MPU is to be written to the specified I/O device.

$\overline{IOR}$ ($\overline{INPUT/OUTPUT\ READ}$) goes low when both $\overline{WR}$ and IO/$\overline{M}$ are high. This indicates that the data from the specified I/O device is to be placed on the Data Bus and read by the MPU.

When IOW is low the second 2-to-4 decoder A41 is enabled. The signals AB5 and AB6 are used to produce the following output signals.

$\overline{OUT0}$ goes low when both AB5 and AB6 are low. This signal is used in conjunction with the phase two (02) clock to clock attributes from the Data Bus to the Video section.

$\overline{OUT1}$ goes low when AB5 is high and AB6 is low. This causes the bell to sound.

$\overline{OUT2}$ goes low when AB5 is high and AB6 is high. This signal is used in conjunction with the phase two (02) clock to set the baud rat

OUT3 goes low when both AB5 and AB6 are high. This causes a STORE function to the EAPROM to be executed.

One 3-to-8 decoder A42 is used to control the chip enable signals for the **MDT 20**. When IO/$\overline{M}$ is high and both AB14 and AB15 are low, this decoder is enabled. The input signals AB11-AB13 are decoded to produce the chip enable signals. The enabling address map is shown in **figure 4-5**. An explanation of the output signals follows. Note that '$' precedes the addresses to indicate that they are hex addresses.

$\overline{Y0}$ and $\overline{Y1}$ produce $\overline{ROM}$ ($0000 and $0800) which enables the program ROM.

$\overline{Y2}$ produces $\overline{MEM}$ ($1000) which enables the system RAM.

$\overline{Y3}$ produces $\overline{CRTC}$ ($1800) which enables the CRT Controller.

$\overline{Y4}$ produces $\overline{RAMSL}$ ($2000) which enables the Display RAM.

$\overline{Y5}$ produces $\overline{\#50/\#60\ HERTZ}$ ($2800) which is gated with $\overline{MEMR}$ to produce $\overline{HZ\ CAP\ LK\ EN}$. $\overline{HZ\ CAP\ LK\ EN}$ is used to determine the vertical frame rate (60 HZ operations are employed in the **MDT 20**) and determine whether the CAP LOCK button is depressed.

$\overline{Y6}$ produces $\overline{CS}$ ($3000) which enables the EAPROM.

$\overline{Y7}$ produces $\overline{AR}$ ($3800) which causes data to be written from the EAPROM to RAM.

ADDRESS BUS LINES								BASE ADDRESS (HEX)	SIGNAL/CHIP ENABLED
15	14	13	12	11	10	9	8		
0	0	0	0	0	X	X	X	0000	$\overline{ROM}$
0	0	0	0	1	X	X	X	0800	$\overline{ROM}$
0	0	0	1	0	X	X	X	1000	Scratchpad $\overline{MEM}$
0	0	0	1	1	X	X	X	1800 1801	$\overline{CRTC}$ load address $\overline{CRTC}$ load data
0	0	1	0	0	X	X	X	2000	$\overline{RAMSL}$ display RAM
0	0	1	0	1	X	X	X	2800	$\overline{HZ\ CAP\ LK\ EN}$
0	0	1	1	0	X	X	X	3000	$\overline{CS}$ to EAPROM
0	0	1	1	1	X	X	X	3800	$\overline{AR}$ to EAPROM

Figure 4-5. Enabling Address Map

4.5 EXTERNAL INTERFACE SECTION

A block diagram of the External Interface section is shown in **figure 4-6.**

4.5.1 External Interface Section Overview

The External Interface section controls the transfer of data between the **MDT 20** and the host computer (modem) or serial printer.

Data to be transferred from the **MDT 20** through the two external interface ports is routed from the MPU (over the Data Bus) to the appropriate USART and then to the modem or printer port over TXD.

Data from a host computer or modem is received serially on the Modem USART over line RXD. The Modem USART sends the data over the Data Bus to the MPU.

4.5.2 Modem 8251 USART A14 (Schematic P2)

The Modem 8251 USART provides the control necessary for passing data between the MPU and a host computer. Interfacing through the modem port, the Modem USART receives data from the external device over the RXD (Received External Data) line and transmits data to the device over the TXD (Transmit External Data) line. Data is passed between the Modem USART and the MPU over the Data Bus.

The input and output signals for the Modem USART are descibed below.

D0-D7 (Data Bus) pass data between the Modem USART and the MPU. When receiving, serial data is taken from RXD and placed in the RECEIVE register of the USART. When the register is filled, the data is clocked out in parallel over D0-D7 to the MPU. When transmitting, data in parallel is taken from D0-D7 and placed in the TRANSMIT register of the USART. The data is then clocked out serially over TXD.

C/$\overline{D}$ (CONTROL/$\overline{DATA}$) determines the type of data that the Data Bus contains. When C/D is high, the Data Bus contains control or status information. When C/D is low, the Data Bus contains data. This signal is used in conjunction with RD, WR, and CS. C/D goes high only during initial set-up.

$\overline{CS}$ ($\overline{CHIP\ SELECT}$) goes low to enable the Modem USART. This signal is used in conjunction with $\overline{RD}$, $\overline{WR}$, and C/$\overline{D}$. $\overline{CS}$ is received over AB2 from the CPU section.

RXRDY (Receive External Data Ready) goes high to indicates that the Modem USART contains data in its RECEIVE register and is ready for this data to be fetched by the MPU. This signal is received by the MPU as INT1.

$\overline{TXC}$ ($\overline{TRANSMIT\ CLOCK}$) and $\overline{RXC}$ ($\overline{RECEIVED\ CLOCK}$) are the clocking frequencies for transmitting and receiving data. These signals will vary with the baud rate that is received from the Baud Rate Generator All. Note that data is transmitted and received at the same baud rate.

TXD (TRANSMIT DATA) passes the character bit pattern from the TRANSMIT register to modem port pin 2. The data are clocked on the falling edge of the TXC signal.

$\overline{RTS}$ ($\overline{READY\ TO\ SEND}$) is an output signal which is sent to the modem port. When low, RTS indicates that the Modem USART is ready to send data to the host computer.

$\overline{DTR}$ ($\overline{DATA\ TERMINAL\ READY}$) is an output signal which is sent to the modem port. DTR is set to a low level to indicate to the host computer that the Modem USART is ready to receive data.

RXD (RECEIVE DATA) clocks the character bit pattern from modem port pin 3 to the RECEIVE register. The data are clocked on the leading edge of the RXC signal.

$\overline{CTS}$ ($\overline{CLEAR\ TO\ SEND}$) is an input signal which is received from the modem port. When this signal is low, it enables the Modem USART for transmitting data to the ho

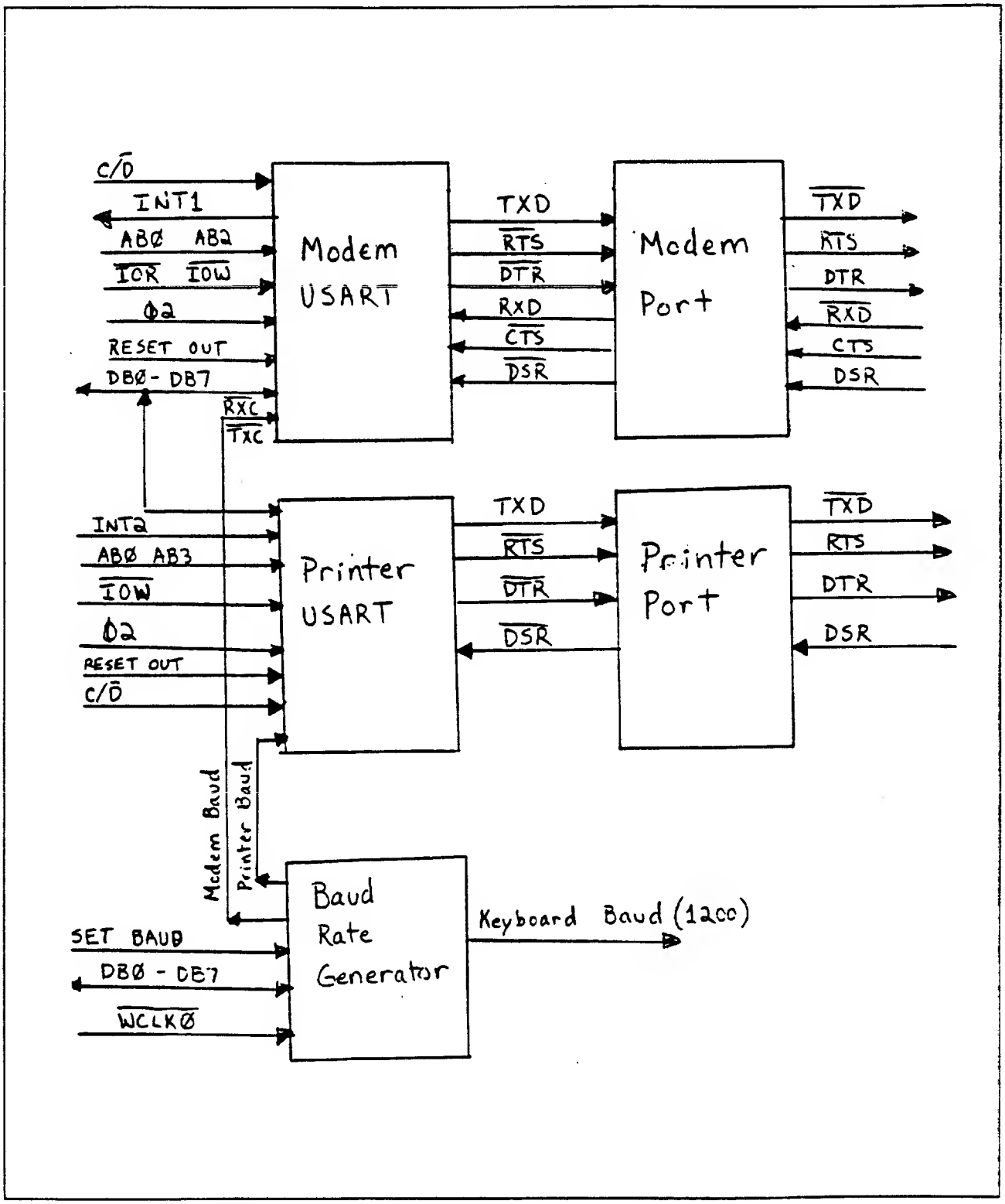

Figure 4-6. External Interface Section Block Diagram

computer. If this signal is reset to a high level during the transmission of a character, the Modem USART will finish the transmission of the character before halting transmisison.

$\overline{\text{DSR}}$ ($\overline{\text{DATA SET READY}}$) is an input signal which, when low, indicates that the data set (modem) is powered up.

$\overline{\text{RD}}$ ($\overline{\text{READ}}$) is an input signal which is received over line $\overline{\text{IOR}}$ from the CPU section. When RD goes low, it indicates that the MPU is ready to read data from the Modem USART over the Data Bus.

$\overline{\text{WR}}$ ($\overline{\text{WRITE}}$) is an input signal which is received over line $\overline{\text{IOW}}$ from the CPU section. When $\overline{\text{WR}}$ goes low, it indicates that the MPU is ready to write data to the Modem USART over the Data Bus.

CLK (CLOCK) is the input clocking signal that is used to generate the Modem USART's internal timing. This signal is connected to the phase two (02) clock signal that is produced by the MPU. CLK oscillates at 3.072 MHz.

RST (RESET) is the input signal which, when high, causes the Modem USART to wait for a new set of control words to be written in by the MPU. RST is connected to the RESET OUT signal that is produced by the MPU. RST must be held high for six clock cycles in order to perform a reset.

Data Transmission

The **MDT 20** transmits data to the modem port in the following sequence of signals.

The MPU sends signals to the Modem USART which cause $\overline{\text{WR}}$, C/$\overline{\text{D}}$, and $\overline{\text{CS}}$ to go low, $\overline{\text{RD}}$ to go high, and 02 to oscillate at 3.072 MHz. The character bit pattern is clocked in parallel from the Data Bus to the TRANSMIT register. The $\overline{\text{RTS}}$ signal goes low and is inverted before being received at modem port pin 4. When the host computer is ready to have the data transmitted, it sends a high signal over CTS (pin 5) which is inverted and received by the Modem USART as $\overline{\text{CTS}}$. The Modem USART then serially clocks out the character bit pattern over TXD.

TXD may be sent to the modem port with 20mA current loop operation or RS-232-C signal. If RS-232-C is being used, then line 1 on tri-state node A6 is set low, TXD is inverted, and received at the modem port on pin 2. If the current loop operation is in use, then TDX is inverted, line 13 on tri-state node A6 is set low, and TXD is sent to the Optical Coupler A14. The Optical Coupler transforms TXD from TTL (Transistor to Transistor Logic) to current loop. Inside the Optical Coupler, a diode flashes light particles on a transistor which produces a signal that is sent to a bridge rectifier. The current loop signal is sent to the modem port pins 24 and 17.

Data Reception

The **MDT 20** receives data from the modem port in the following sequence of signals.

When the Modem USART is ready to receive data from the modem port, $\overline{\text{DTR}}$ is sent out low, inverted, and sent to pin 20 of the modem port. The Modem USART then receives data from the host computer over RXD.

RXD may be received with 20mA current loop operation or RS-232-C signal. If RS-232-C is being used, then data is received at pin 3 of the modem port, inverted, and passed through the tri-state node A6. Line 4 of the tri-state node goes low for RS-232-C signals. If the current loop operation is in use, then data is received at pins 23 and 25 of the modem port. The input signal is sent through a bridge rectifier and Optical Coupler A5 to transform the signal from current loop to TTL. The signal is inverted and passed through tri-state node A6. This tri-state node is enabled for current loop operation when line 10 is low. In either mode of operation, the data is serially received by the Modem USART on RXD.

The RXD character bit pattern is written into the RECEIVE register. When the RECEIVE register is filled, the Modem USART sets RXRDY high which is sent as INT1 to the MPU. This informs the MPU that the Modem USART has received a character. In order to read the character, the MPU sets $\overline{\text{RD}}$, C/

and $\overline{CS}$ low, and $\overline{WR}$ high. 02 oscillates at 3.072 MHz to clock the character out over the Data Bus.

4.5.3 Auxiliary 8251 USART A13 (Schematic P2)

The Auxiliary 8251 USART provides the control necessary for passing data from the MPU to an RO (Receive Only) serial printer or other RO device. Data is received from the MPU over the Data Bus and is sent from the Auxiliary USART to the printer port over TXD.

Notice that the Auxiliary USART operates in a similar fashion to the Modem USART.

The input and output signals for the Auxiliary USART are described below.

D0-D7 (Data Bus) pass data from the MPU to the Auxiliary USART. When transmitting, data in parallel is taken from D0-D7 and placed in the TRANSMIT register. The data is then clocked serially of TXD.

C/$\overline{D}$ ($\overline{CONTROL/DATA}$) determines the type of data that the Data Bus contains. When C/$\overline{D}$ is high, the Data Bus contains control or status information. When C/$\overline{D}$ is low, the Data Bus contains data. This signal is used in conjunction with $\overline{WR}$ and $\overline{CS}$. C/$\overline{D}$ goes high only during initial set-up.

$\overline{CS}$ ($\overline{CHIP\ SELECT}$) goes low to enable the Auxiliary USART. This signal is received over AB3 from the CPU section. $\overline{CS}$ is used in conjunction with $\overline{WR}$ and C/$\overline{D}$.

RXRDY (RECEIVE EXTERNAL DATA READY) goes high to indicate that the printer buffer is full. RDRDY is sent to the MPU as INT2.

TXC (TRANSMIT CLOCK) and RXC (RECEIVE CLOCK) are the clocking frequencies for transmitting and receiving data. These signals will vary with the baud rate that is received from the Baud Rate Generator All.

TXD (TRANSMIT DATA) passes the character bit pattern from the TRANSMIT register to printer port pin 3. The data are clocked on the falling edge of the TXC signal.

$\overline{RTS}$ ($\overline{READY\ TO\ SEND}$) is an output signal which is sent to the printer port. When low, $\overline{RTS}$ indicates that the Auxiliary USART is ready to send data to the printer.

$\overline{DTR}$ ($\overline{DATA\ TERMINAL\ READY}$) is an output signal which is sent to the printer port. $\overline{DTR}$ is held high to indicate that the Auxiliary USART does not receive data.

RXD (RECEIVE DATA) and $\overline{CTS}$ ($\overline{CLEAR\ TO\ SEND}$) are not used by the Auxiliary USART. $\overline{RD}$ ($\overline{READ}$) is held high.

$\overline{DSR}$ ($\overline{DATA\ SET\ READY}$) is an input signal which, when low, indicates that the data set (printer) is ready to receive data from the Auxiliary USART. When high, $\overline{DSR}$ indicates a busy condition (i.e., the printer buffer is full).

$\overline{WR}$ ($\overline{WRITE}$) is an input signal which is received over line $\overline{IOW}$ from the CPU section. When $\overline{WR}$ goes low, it indicates that the MPU is ready to write data to the Auxiliary USART over the Data Bus.

CLK (CLOCK) is the input clocking signal that is used to generate the Auxiliary USART's internal timing. This signal is connected to the phase two (02) clock signal that is produced by the MPU. CLK oscillates at 3.072 MHz.

RST (RESET) is the input signal which, when high, causes the Auxiliary USART to wait for a new set of control words to be written in by the MPU. RST is connected to the RESET OUT signal that is produced by the MPU. RST must be held high for six clock cycles in order to perform a reset.

Data Transmission

The **MDT 20** transmits data to the printer port in the following sequence of signals.

The MPU sends signals to the Auxiliary USART which causes $\overline{WR}$, C/$\overline{D}$, and $\overline{CS}$ to go low and 02 to oscillate at 3.072 MHz. The character bit pattern is clocked in parallel from the Data Bus to the TRANSMIT register. The $\overline{RTS}$ signal goes low and is inverted before being received at printer port pin 8. When the printer is ready to have the data transmitted, it sends a high signal from pin 20 which is inverted and received by the Auxiliary USART as $\overline{DSR}$. If $\overline{DSR}$ is high, the printer buffer is full and the Auxiliary USART sends INT2 high to the MPU. The MPU must wait until INT2 goes low before sending more data to the Auxiliary USART. The character bit pattern that the MPU sends to the TRANSMIT register is serially clocked out over TXD. TXD is inverted and sent to printer port pin 3 as an RS-232-C signal.

4.5.4 Baud Rate Generator All (Schematic P2)

The **MDT 20** uses a TECO-01 circuit as a Baud Rate Generator. The baud rates for the modem and printer are determined by the user during system set-up. The following baud rates are available: 75, 110, 150, 300, 450, 600, 900, 1200, 1800, 2400, 3600, 4800, 7200, 9600, and 19200.

The input and output signals for the Baud Rate Generator are described below.

STB (SET BAUD) is an input signal that is received from the CPU section. When STB goes high, the bit patterns on signals A1-A4 and B1-B4 are latched onto the Baud Rate Generator's internal data latch.

A1-A4 are input signals that are received from the CPU section on DB0-DB3. These signals are used as inputs for the internal 16-to-1 line data selector/multiplexer. The signal that is produced is sent to output signal TA.

B1-B4 are input signals that are received from the CPU section on DB4-DB7. These signals are used as inputs for the internal 16-to-1 line data selector/multiplexer. The signal that is produced is sent to output signal TB.

The values that are received on A1-A4 and B1-B4 are determined by the user during system set-up.

TA is an output signal that is sent to the Modem USART. TA provides the baud rate for modem operations. Notice that the Modem USART is configured to receive and transmit data at the same baud rate.

TB is an output signal that is sent to the Auxiliary USART. TB provides the baud rate for printer operations.

FO is an output signal that is sent to the Keyboard USART. FO provides a constant baud rate of 1200 to the keyboard.

XT1 is the input clocking signal that is used to generate timing for the Baud Rate Generator's internal divide-by circuitry. XT1 is the $\overline{WCLK0}$ clock signal that is produced in the Video section. XT1 oscillates at 1.8432 MHz.

4.6 KEYBOARD SECTION

The Keyboard section contains the logic necessary to interface the keyboard with the **MDT 20**. A block diagram of the Keyboard section is shown in **figure 4-7**.

4.6.1 Keyboard Section Overview

The MM57499 (SKI) interfaces the Keyboard Matrix with the keyboard connector. Lines X0-X7 strobe the Keyboard Matrix. Lines Y0-Y11 check for high signals (this indicates a key that is depressed). The MM57499 sends the character bit pattern over serial data line TX OUT to the keyboard connector.

The Keyboard 8251 USART interfaces the CPU section with the keyboard connector. Serial data is received by the Keyboard USART from the keyboard connector over line RXD. The data is transferred from the Keyboard USART to the CPU section by the Data Bus.

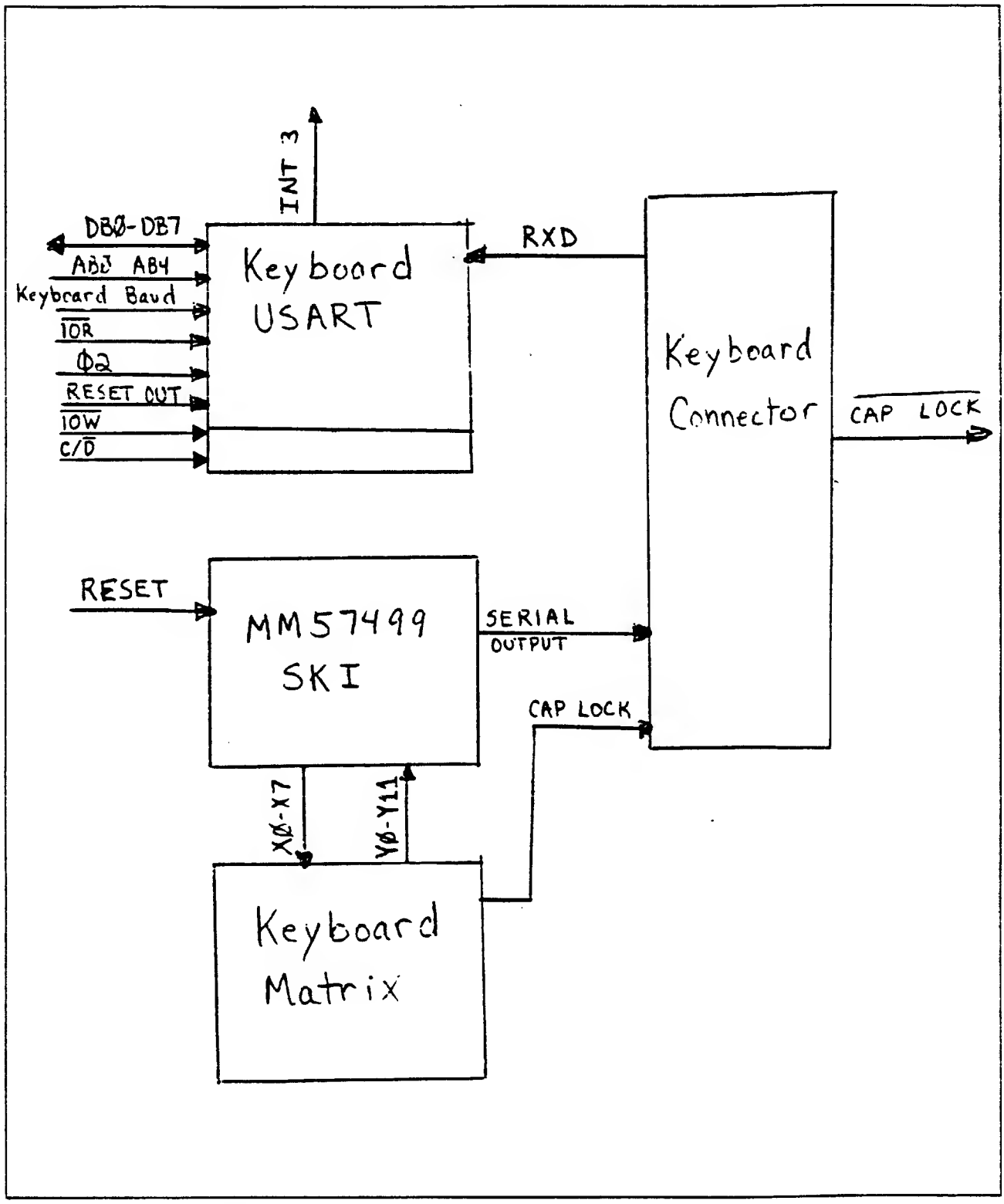

Figure 4-7. Keyboard Section Detailed Block Diagram

4.6.2 MM57499 SKI (Keyboard Schematic)

The MM57499 SKI strobes and checks the Keyboard Matrix for keys that have been depressed by the user. The character bit pattern is serially transmitted to the keyboard connector over TX OUT.

The input and output signals for the SKI are described below.

GND is the input signal that grounds the SKI.

VCC provides a +5 volts input signal for the SKI.

RXIN (RECEIVE) is not used in the MDT 20. This signal is pulled high.

XTAL (pins 2 and 3) clock the SKI's onboard oscillator. These signals are connected to a quartz crystal which oscillates at 3.5795 MHz. Sixteen internal clocking signals are required to generate one interal clock (cycle time).

$\overline{RST}$ ($\overline{RESET}$) is used with an external RC network and diode. The SKI will be reset when this signal is held low for a minimum of 10 microseconds.

X0-X7 are output signals which are used to strobe the Keyboard Matrix. When a line is set high, it is being strobed. Only one of these signals (X0-X7) may be set high at any given time. These signals are used in conjunction with Y0-Y11.

Y0-Y11 are input signals which are used to detect key closures in the Keyboard Matrix. Only one of these signals (Y0-Y11) may be high at any given time. In order to be recognized as a valid key closure, these signals must be held high for at least six XTAL clock times. If these signals are held high for one second, repeat is enabled at a rate of 15 characters per second (CPS). These signals are used in conjuction with X0-X7.

TX OUT (TRANSMIT) is the output signal that sends the character bit pattern to the keyboard connector pin 4 as SO (SERIAL OUTPUT). TX OUT toggles with the outgoing data's bit pattern. The transmission sequence is as follows: 1 stop bit, 1 start bit, 8 data bits, and 1 stop bit. The baud rate for the SKI is set at 1200.

4.6.3 Keyboard Matrix (Keyboard Schematic)

The Keyboard Matrix contains the 96 ADM 22 switches which generate the codes for alphabetic, numeric, symbol, and control characters. X0-X7 are used for strobing the Keyboard Matrix. Y0-Y11 check the Keyboard Matrix for key closures. When CAP LOCK is selected, a high signal is sent to pin 1 of the keyboard connector. From the keyboard connector, the CAP LOCK signal is sent to the MPU on DB1.

4.6.4 Keyboard 8251 USART A12 (Schematic P2)

Keyboard 8251 USART provides the control necessary for passing data from the keyboard connector to the CPU section. Data is sent by the Keyboard USART to the MPU over the Data Bus. Serial data is received from the keyboard connector on RXD.

In input and output signals for the Keyboard USART are descibed below.

D0-D7 (Data Bus) pass data from the Keyboard USART to the MPU. When receiving, serial data is taken from RXD and placed in the RECEIVE register of the USART. When the register is filled, the data is clocked out in parallel over D0-D7 to the MPU.

C/$\overline{D}$ (CONTROL/$\overline{DATA}$) determines the type of data that the Data Bus contains. When C/$\overline{D}$ is high, the Data Bus contains control or status information. When C/$\overline{D}$ is low, the Data Bus contains data. This signal is used in conjunction with $\overline{RD}$ and $\overline{CS}$. C/$\overline{D}$ goes high only during initial set-up.

$\overline{CS}$ ($\overline{CHIP\ SELECT}$) goes low to enable the Keyboard USART. This signal is used in conjunction with $\overline{RD}$ and C/$\overline{D}$. $\overline{CS}$ is received over AB4 from the CPU section.

$\overline{\text{TXC}}$ ($\overline{\text{TRANSMIT CLOCK}}$) and $\overline{\text{RXC}}$ ($\overline{\text{RECEIVE CLOCK}}$) are the clocking frequencies for transmitting and receiving data. These signals are set at baud rate of 1200 that is received from the Baud Rate Generator All.

RXD (RECEIVE DATA) clocks the character bit pattern from keyboard connector pin 4 to the RECEIVE register. The data are clocked on the leading edge of the RXC signal.

RXRDY (RECEIVE EXTERNAL DATA READY) goes high to indicate that the Keyboard USART contains data in its RECEIVE register and is ready for this data to be fetched by the MPU. This signal is received by the MPU as INT3.

$\overline{\text{RD}}$ ($\overline{\text{READ}}$) is an input signal which is received over line $\overline{\text{IOR}}$ from the CPU section. When $\overline{\text{RD}}$ goes low, it indicates that MPU is ready to read data from the Keyboard USART over the Data Bus.

$\overline{\text{WR}}$ ($\overline{\text{WRITE}}$) is held high to inhibit writes to the Keyboard USART.

CLK (CLOCK) is the input clocking signal that is used to generate the Keyboard USART's internal timing. This signal is connected to the phase two (02) clock signal that is produced by the MPU. CLK oscillates at 3.072 MHz.

RST (RESET) is the input signal which, when high, causes the Keyboard USART to wait for a new set of control words to be written in by the MPU. RST is connected to the RESET OUT signal that is produced by the MPU. RST must be held high for six clock cycles in order to perform a reset.

Data Reception

The MDT 20 receives data from the keyboard connector in the following sequence of signals.

The Keyboard USART receives serial data from keyboard connector pin 4 on RXD. When the RECEIVE register is filled, the Keyboard USART sets RXRDY high which is sent at INT3 to the MPU. This informs the MPU that the Keyboard USART has received a character. In order to read the character, the MPU sets $\overline{\text{RD}}$, C/$\overline{\text{D}}$, and $\overline{\text{CS}}$ low. 02 oscillates at 3.072 MHz to clock the character out over the Data Bus.

$\overline{\text{HZ CAP LK EN}}$ goes low on pin 13 of tri-state node A18 in order to pass the current value of CAP LOCK to the MPU over DB1. This signal also goes low on pin 10 of tri-state node A18 if 50 Hz operation is desired.

4.7 SYSTEM MEMORY SECTION

A block diagram of the Memory section is shown in **figure 4-8.**

4.7.1 Memory Section Overview

The Memory section contains the system scratchpad memory, MDT 20 control program, and system configuration information.

The MPU reads data from the Memory section by selecting a memory chip with the chip select signals produced by the CPU section. The address of the memory location to be accessed is placed on the Address Bus (A0-A15). The data from memory is placed on the Data Bus (DB0-DB7) to be routed to the MPU.

The MPU places data in the RAM by selecting the RAM chip and placing the address of the location where data is to be written on the Address Bus. Data is routed to the RAM from the MPU over the Data Bus.

The MDT 20 places data in the EAPROM by selecting the EAPROM chip and writing 64 nibbles (256 bits) of data from RAM to the EAPROM. Data is written to the EAPROM from RAM on the Data Bus when the user executes a SAVE command during system set-up.

4.7.2 4K ROM A44 (Schematic P1)

The 4K ROM contains the MDT control program and other related firmware.

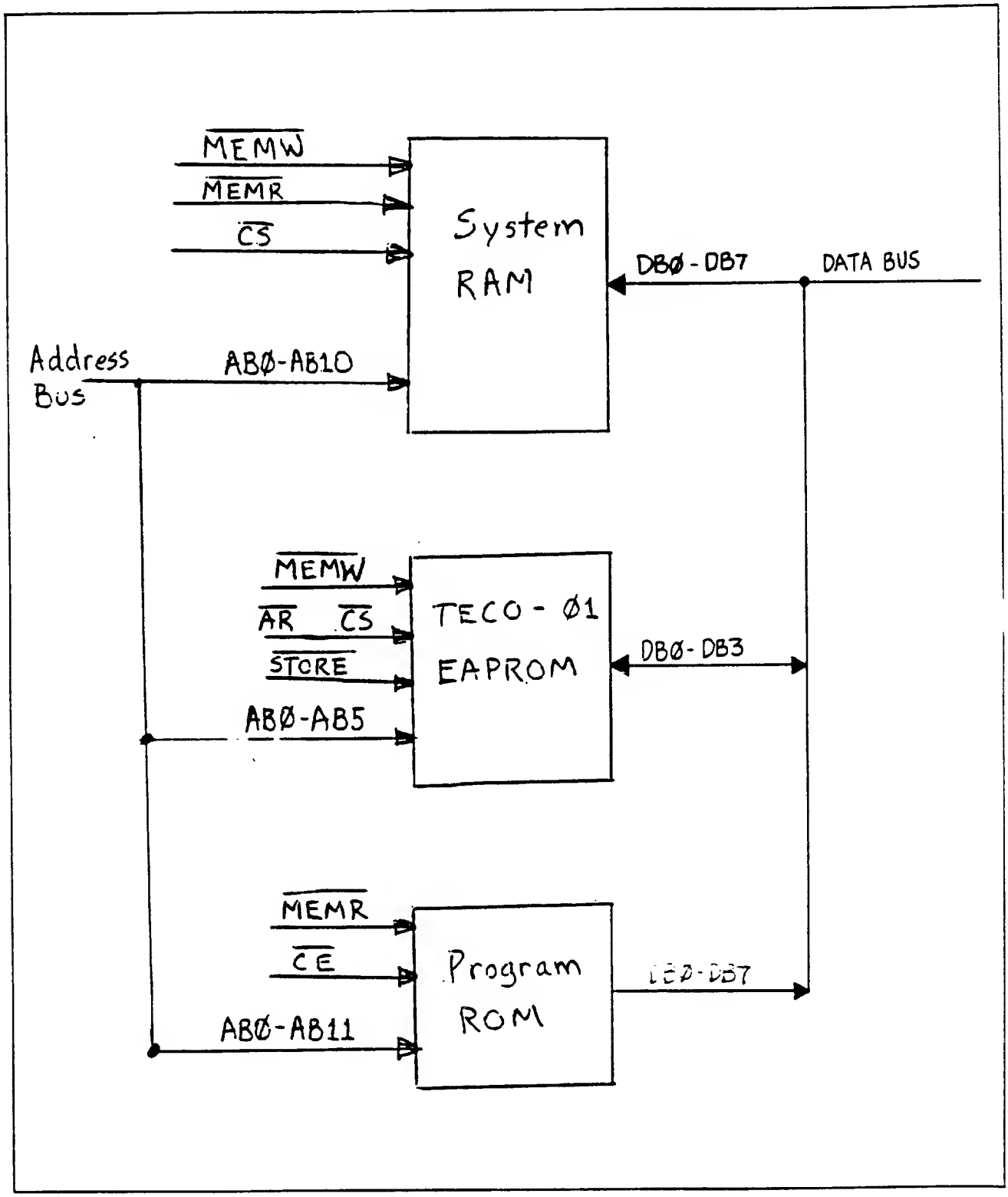

Figure 4-8. System Memory Detailed Block Diagram

$\overline{CE}$ ($\overline{CHIP\ ENABLE}$) goes low to enable the ROM when either address $0000 or $0800 is selected by the 3-to-8 decoder A42. ('$' is used here to signify a hexadecimal address.)

$\overline{DE}$ is the input signal which, when low, enables the ROM to be read by the MPU. The MPU sends $\overline{MEMR}$ ($\overline{MEMORY\ READ}$) to the $\overline{DE}$ signal of the ROM.

A0-A11 receive addresses from the Address Bus (AB0-AB11). The address specifies the memory location that is to be read.

The Data Bus (DB0-DB7) is used for transferring the information from the ROM to the MPU.

When the system ROM is enabled, the data from the address specified by A0-A10 is placed on the Data Bus and sent to the MPU.

4.7.3 2K RAM A45 (Schematic P1)

The 2K RAM is used for temporary data storage, scratchpad memory, input, and output data buffers.

$\overline{CS}$ ($\overline{CHIP\ SELECT}$) goes low to enable the RAM when address $1000 is selected by the 3-to-8 decoder A42.

$\overline{OE}$ ($\overline{OUTPUT\ ENABLE}$) is the input signal which, when low, enables the RAM to be read by the MPU. The CPU section sends $\overline{MEMR}$ ($\overline{MEMORY\ READ}$) to the $\overline{OE}$ signal of the RAM.

$\overline{WE}$ ($\overline{WRITE\ ENABLE}$) is the input signal which, when low, enables the RAM to be written to by the MPU. The CPU section sends $\overline{MEMW}$ ($\overline{MEMORY\ WRITE}$) to the $\overline{WE}$ signal of the RAM.

Note

At any given time, either $\overline{OE}$ or $\overline{WE}$ can be low, but both cannot have a low signal.

A0-A10 receive addresses from the Address Bus (AB0-AB10). The address specifies the memory location that is to be read from or written to.

I/O1-I/O8 receive and transmit data that is being written to or read from RAM. The Data Bus interfaces I/O1-I/O8 with the rest of the **MDT 20.**

Data Reads

Data is read from the system RAM to the MPU in the following way.

The CPU section sets $\overline{CS}$ and $\overline{OE}$ low and sets $\overline{WE}$ high. The address that is to be read from is placed on the Address Bus and read by the RAM. The information from the specified address is placed on the Data Bus and sent to the MPU.

Data Writes

Data is written to the system RAM from the MPU in the following way.

The CPU section sets $\overline{CS}$ and $\overline{WE}$ low and sets $\overline{OE}$ high. The address that is to be written to is placed on the Address Bus and is read by the RAM. The information on the Data Bus is written into the RAM at the specified address.

4.7.4 X2210 Electrically Alterable PROM A8 (Schematic P2)

The Electrically Alterable PROM (EAPROM) stores information that is received from the lower order nibble of the Data Bus DB0-DB3). This data provides information on attributes and system configuration that have been selected by the operator during system set-up.

A0-A5 are the input signals that are used for addressing the 64 nibbles of EAPROM non-volatile memory. The address is received from the Address Bus (AB0-AB5).

I/O1-I/O4 are used for data transfers to and from the EAPROM. These signals are attached to the lower order nibble of the Data Bus (DB0-DB3).

$\overline{WE}$ ($\overline{WRITE\ ENABLE}$) is the input signal which, when low, enables the RAM write mode. When high, this signal enables the RAM read mode.

$\overline{\text{STORE}}$ is the input signal which, when low, causes the following to occur:

1. 64 nibbles of scratchpad memory (RAM) are loaded into the corresponding 256 bit locations of non-volatile EAPROM memory.
2. $\overline{\text{WR}}$ and $\overline{\text{AR}}$ are inhibited, and
3. I/O1-I/O4 are set to their high impedance state.

$\overline{\text{STORE}}$ is inhibited during power-up and when $\overline{\text{AR}}$ is low. The $\overline{\text{STORE}}$ signal is produced by combining AB1 and $\overline{\text{OUT3}}$ from the CPU section in an OR gate. When $\overline{\text{OUT3}}$ is low, $\overline{\text{STORE}}$ is low.

$\overline{\text{AR}}$ ($\overline{\text{ARRAY RECALL}}$) is an input signal which, when low, causes the 256 bits of non-volatile data stored in the EAPROM to be copied back into the 256 bit RAM memory. This operation also inhibits the $\overline{\text{STORE}}$ signal. $\overline{\text{AR}}$ goes low when address $3800 is selected by the 3-to-8 decoder A42.

$\overline{\text{CS}}$ ($\overline{\text{CHIP SELECT}}$) goes low to enable the EAPROM when address $3000 is selected by the 3-to-8 decoder A42.

4.8 VIDEO SECTION

The Video section generates and controls the data that is displayed on the **MDT 20** CRT monitor. A block diagram of the Video section is presented in **figure 4-9**.

4.8.1 Video Section Overview

The Video section consists of a CRT Controller, 2K of Display RAM, Display RAM Buffer, RAM Address Selector, Refresh Data Control, Character Generator, Parallel-to-Serial Converter, Video Clock Generation, Video Logic, and a CRT Monitor.

Data used to control the operation of the CRT Controller is routed via the Data Bus.

The CRT Controller converts the data to Memory Address bits (MA0-MA10) and generates the signals HORIZONTAL SYNCHRONIZE (HSYNC), VERTICAL SYNCHONRIZE (VSYNC), DISPLAY ENABLE (DISP EN), and CURSOR, which are routed to the Video Logic. The Memory Address bits are used as address inputs to the Display RAM. Data from the Display RAM is either routed to the CPU section via the Data Bus (DB0-DB7) or sent to the Character Generator via the RAM Data Bus (RD0-RD7).

The Character Generator retrieves the data needed to display the character on the CRT screen and sends it through a Parallel-to-Serial Converter before being sent to the Video Logic where it is conditioned to be displayed on the CRT Monitor.

4.8.2 CRT Controller (6845 CTRC) A31 (Schematic P3)

The CRT Controller is an MPU programmable device which contains logic necessary to generate timing signals and perform data formatting operations for the CRT Monitor.

The CRT Controller contains 23 interfa registers. These registers are used to hold such information as CRT Controller status and mode, characters per data row, data rows per frame, raster scans per row, raster scans per frame, cursor position, and address. The MPU places data in these registers by addressing one of the 23 internal registers using DB0-DB7 and selecting the CRT Controller using $\overline{\text{CTRC}}$.

Address bit AB0 is used to access the internal registers in the CRT Controller. When AB0 equals 0, register X is enable. When AB0 equals 1, one of the registers R0-R17 is enabled.

The functions of some of the internal registers are listed below.

Register X is a write-only address register that is used as a pointer to direct data transfers to and from the MPU.

R0 (Horizontal Totals Register) is programmed to select how many character positions (character times) will occupy ea

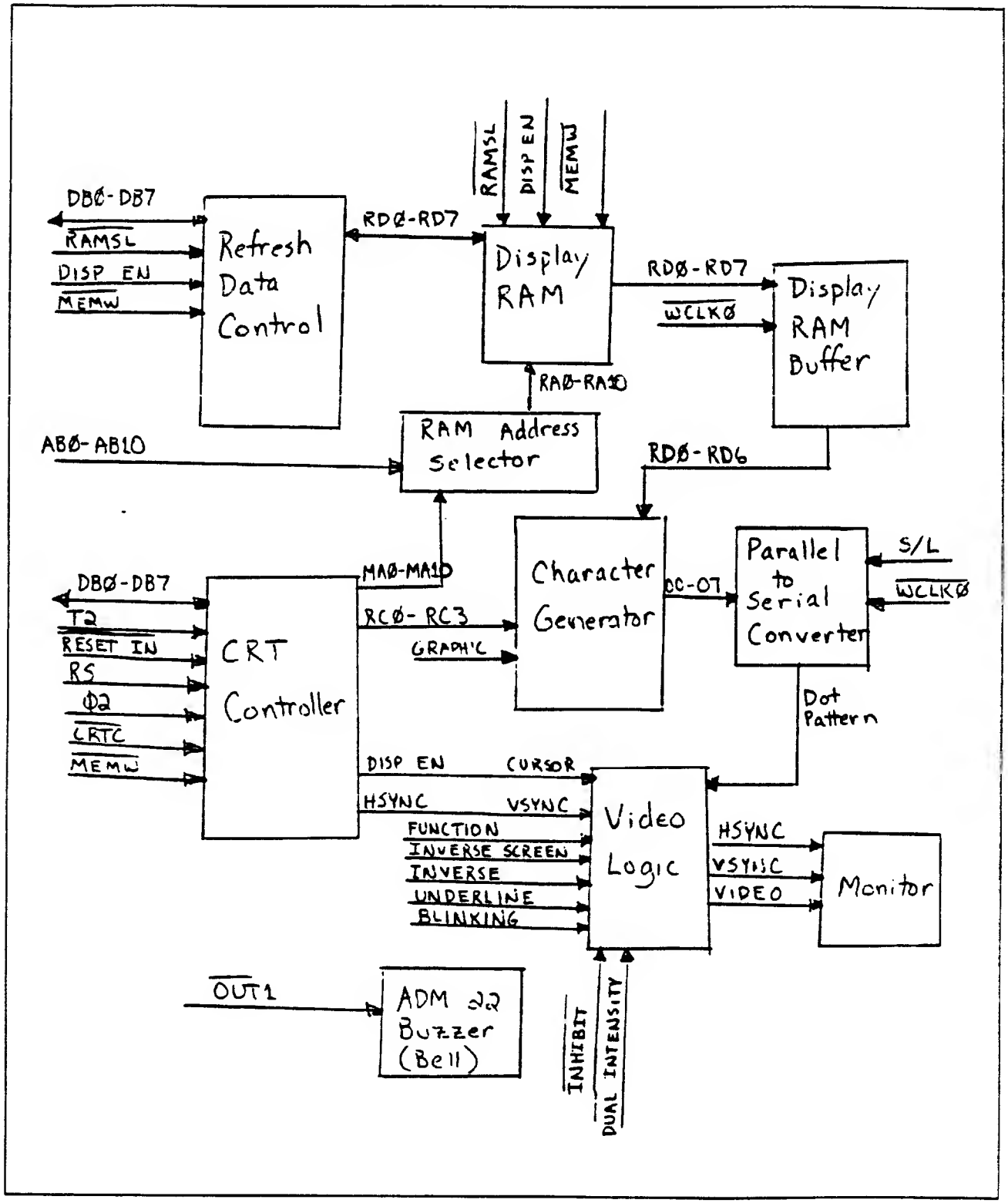

Figure 4-9. Video Section Detailed Block Diagram

scan line. The frequency of HSYNC is determined by this write-only register. One hundred one character times (0-100) are programmed for each scan line.

R1 (Horizontal Display Register) is programmed to select how many displayable characters will occupy each scan line. This write-only register is programmed to display 80 character per line.

R2 (Horizontal Sync Position) is a write-only register that is programmed to cause the horizontal sync pulse to occur at character time 85 on a scan line.

R3 (Horizontal Sync Width) is a write-only register that is programmed to select the horizontal width. HSYNC width equals 15 character clock times.

R4 (Vertical Total) is a write-only register that is programmed to select the total number of character rows in a frame. 25 rows (0-24) are programmed.

R5 (Vertical Total Adjust) is a write-only register that selects the number of additional scan lines (4) to complete an entire frame scan.

R6 (Vertical Display) is a write-only register that selects the number of displayed character rows (24) in each frame.

R7 (Vertical Sync Position) is a write-only register that selects the character row time (24) at which the VSYNC pulse will occur.

R8 (Interlace Mode Control) is a write-only register that selects the operating modes of the CRTC. The display uses non-interlace mode. Updates will occur during horizontal and vertical blanking (retrace) times. See Table 4-1 for all available bit patteren of bits 0 to 1.

R9 (Scan Line) is a write-only register that selects the number of scan lines (12) each character row will have (spacing is included).

R10 (Cursor Start) is a write-only register which selects the starting scan line for the cursor and the cursor blink rate. See Table 4-1 for all available bit patterns for bits 5 and 6.

Table 4-1. Operating and Cursor Modes' Bit Patterns

REGISTER R8		
BIT 1	BIT 0	OPERATING MODE
0	0	NON-INTERLACED/NORMAL SYNC
0	1	INTERLACED SYNC RASTER SCAN
1	0	NON-INTERLACED/NORMAL SYNC
1	1	INTERLACED SYNC/VIDEO RASTER SCAN

REGISTER R10		
BIT 6	BIT 5	CURSOR MODE
0	0	NON-BLINKING
0	1	NO CURSOR
1	0	BLINK AT 1/16 FIELD RATE
1	1	BLINK AT 1/32 FIELD RATE

Table 4-2. 6845 CRTC Internal Registers

REGISTER NUMBER	STORED HEX	DATA BINARY	FUNCTION EVOKED
R0	64	01100100	100+1=101 displayed/non-displayed characters (0-100) per horizontal line.
R1	50	01010000	80 displayable characters per horizontal line.
R2	55	01010010	82 horizontal sync positions on a horizontal line.
R3	0F	00001111	HSYNC width = 15 character clock time.
R4	18	00011000	24+1=25 character row (0-23) per frame.
R5	04	000001100	4 additional scan lines (added to character rows per frame).
R6	18	00011000	24 displayable data rows per frame.
R7	18	00011000	VSYNC pulse will occur at the end of row 24.
R8	00	00000000	Display is non-interlaced. Updates occur during horizontal or vertical blanking (retrace) times.
R9	0B	00001011	11+1=12 scan lines per character row.
R10	XX	XXXXXXXX	Defines cursor start scan lin and blink rate.
R11	XX	XXXXXXXX	Defines cursor end scan line.

R11 (Cursor End) is a write-only register that selects the ending scan line for the cursor.

Table 4-2 lists registers R0-R11 and their functions. A diagram of how a frame is scanned is shown in **figure 4-10**.

The T2 signal from the video timing is the character timing clock input (CLK) and is used to control all count/control functions of the CRT Controller. T2 oscillates at 1.8432 MHz.

Reset signal $\overline{RES}$, when set to zero (low), initializes all internal counters of the CRT Controller to zero. All scan and video signals are set to zero. When this signal is reset to 1 (high), all scan times are initiated.

The Phase Two (02) timing signal is used to trigger the transfer of data between the CRT Controller and the CPU. The 02 signal is negative edge triggered. 02 is attached to the E input of the $\overline{CRTC}$ and is used in conjunction with $\overline{CRTC}$ and $\overline{MEMW}$ to enable the CRTC.

VCC provides +5 volts for the CRTC power supply.

READ/$\overline{WRITE}$ signal R/$\overline{W}$ controls the direction of data transfer on the Data Bus (DB0-DB7). When R/$\overline{W}$ is high, data (e.g., the cursor position) from the CRT Controller is sent to the MPU. Data from the MPU is written into the CRT Controller when R/$\overline{W}$ is low. R/$\overline{W}$ is connected to the $\overline{MEMW}$ signal from the CPU section.

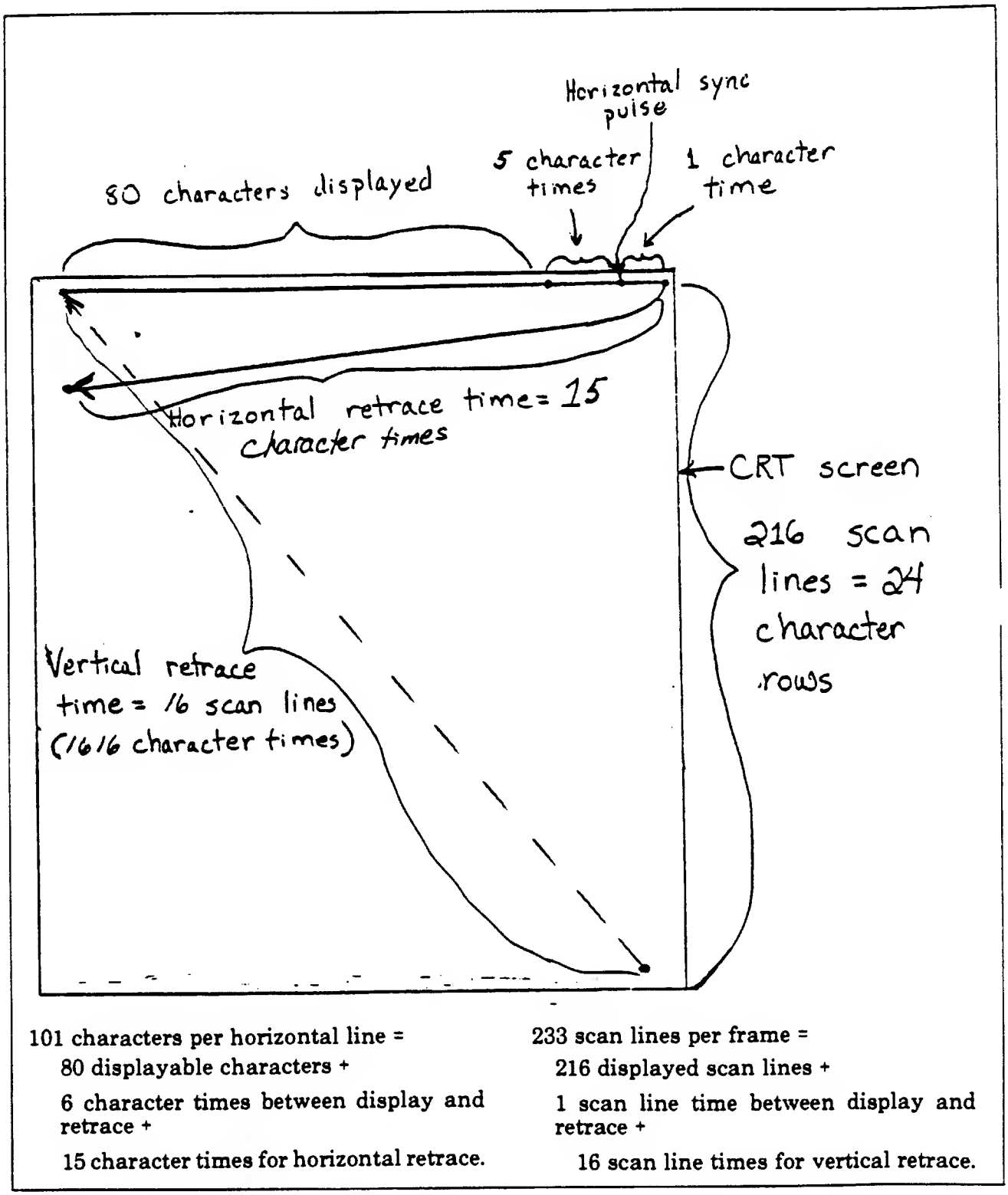

101 characters per horizontal line =
- 80 displayable characters +
- 6 character times between display and retrace +
- 15 character times for horizontal retrace.

233 scan lines per frame =
- 216 displayed scan lines +
- 1 scan line time between display and retrace +
- 16 scan line times for vertical retrace.

Figure 4-10. Frame Sean Diagram

$\overline{CRTC}$ supplies the chip select ($\overline{CS}$) signal for the 6845 CTRC. When low, the MPU is writing into or reading from the CRTC. This signal is used in conjunction with the R/W and 02 signals.

The Data Bus (D0-D7) is used for transferring data between the MPU and CRTC.

The following output signals are transmitted by the CRT Controller.

Memory Address bits MA0-MA10 are output on the MA Bus to the Display RAM Address Selector. These signals will address up to 16K of memory. The address is passed to the Display RAM via the RAM Address Bits (RA0-RA10).

Display Enable (DISP) is used to select video attributes. This signal is high when the CRTC is generating active display information.

The VSS and LPSTB signals are grounded.

CURSOR (CUDISP) is the Cursor Video signal and defines the cursor location in the CRT data field. This signal is high when the scan coincides with the programmed cursor position. The cursor position may be programmed to be any character position in the address field. Registers R10 and R11 are used to program the start and stop scan lines of the cursor.

HORIZONTAL SYNCHRONIZE (HSYNC - 19.2 KHz) and VERTICAL SYNCHRONIZE (VSYNC - 50 of 60 Hz) initiate the horizontal and vertical retrace of the CRT screen. The pulse width and time position of these signals are fully programmable.

The Raster Counter outputs (RC0-RC3) provide row selection for the Character Generator. The number of scan lines per character and spacing between character rows are programmable.

4.8.3 Display RAM Address Selector A29, A30, A43 (Schematic P3)

The Display RAM Address Selector determines the address that is to be referenced in the Display RAM. The Address Selector receives address inputs from the CPU section via the Address Bus (AB0-AB10) and from the CRTC via the Memory Address bits (A0-A10). The selected address is passed to the Display RAM via the RAM Address bits (RA0-RA10).

$\overline{G}$ is the ground reference for the Address Selector.

S determines whether the address is to be gotten from the CPU section (AB0-AB10) or the CRTC (A0-A10). When S is low, the address is retrieved from AB0-AB10. This signal is attached to DISP EN from the CRTC. A high signal indicates that a valid refresh of the screen is to take place.

4.8.4 Refresh Data Control A20 (Schematic P3)

The Refresh Data Control controls the direction of data flow between the Display RAM and the CPU.

The Display Enable signal (DISP EN) from the CRT Controller and the RAM Select signal (RAMSL) from the CPU section enable the flow of data through the Refresh Data Control Transceiver. DISP EN, RAMSL, and MEMW (from the CPU section) are gated (A37) to produce DIR which controls the direction of data flow in the Refresh Data Control Transceiver. When DIR is high, the Refresh Data Control Transceiver is enabled for reading data to the MPU. When DIR is low, the Refresh Data Control Transceiver is enabled for writing data from the MPU.

When DIR is high, data flows on RAM Data Bus (RD0-RD7) from the Display RAM through the Refresh Data Control Transceiver and is output on the Data Bus (DB0-DB7) to the MPU. When DIR is low, data flows in the reverse direction from the Data Bus to the RAM Data Bus.

4.8.5 Display RAM A21 (Schematic P3)

The Display RAM contains the 2K of data that is displayed on the CRT screen.

The Display RAM is enabled by $\overline{WE}$ or $\overline{OE}$.

A data read or data write is specified for the Display RAM by WE and $\overline{OE}$. If $\overline{WE}$ ($\overline{WRITE\ ENABLE}$) is high and $\overline{OE}$ ($\overline{OUTPUT\ ENABLE}$) is low, data is read from the location specified by RA0-RA10, placed on RD0-RD7 and routed to the RAM Buffer and the Refresh Data Control. If WE is low and OE is high, data on RD0-RD7 (from the Refresh Data Control) is written in the Display RAM at the location specified by RA0-RA10. The $\overline{WE}$ signal is the same as the DIR signal of the Refresh Data Control. $\overline{OE}$ and $\overline{WE}$ inverted. Thus, when one signal is low, the other signal is high.

4.8.6 Display RAM Buffer A22 (Schematic P3)

The Display RAM Buffer is used to transfer data between the Display RAM, Character Generator, and Video Logic.

Data from the Display RAM (RD0-RD7) is clocked through the Display RAM Buffer by the Video section clock and output on Q1-Q8. Q1-Q3 and Q5-Q8 are tranferred to the Character Generator. Q4 is sent to the Video Logic. The Video section clock is attached to the CLK input and oscillates at 16.588 MHz.

$\overline{G}$ is the input signal which, when low, enables the Display RAM Buffer. G is attached to $\overline{WCLK0}$ ($\overline{WRITE\ CLOCK\ 0}$) which oscillates at 1.8432 MHz.

4.8.7 Video Timing Generator (Schematic P3)

Divide-by-Nine Counter A25 and a quartz crystal that oscillates at 16.588 MHz produce the timing signals for the Video Section.

Inverters A47 isolate the quartz crystal. Its signal is used for clocking data through the RAM Data Buffer A22, Video Latch A32, and Divide-by-Nine Counter. This signal is also used as the S/L (SHIFT LOAD) input for the Parallel-to-Serial Converter.

The Divide-by-Nine Counter produces $\overline{WCLK0}$ ($\overline{WRITE\ CLOCK\ 0}$) which oscillates at 1.8432 MHz. $\overline{WCLK0}$ clocks the Baud Rate Generator and the Parallel-to-Serial Converter. $\overline{WCLK0}$ also enables the Buffer Data Latch and the Video Data Latch.

4.8.8 Video Latch A32 (Schematic P3)

The Video Latch clocks the Raster Counts (RC0-RC3) from the CRTC to the Character Generator. The Raster Counter output provides the row selection for the Character Generator.

The Video Latch also delays CURSOR one character time so that when the cursor is displayed on the CRT, it follows the last character that was displayed.

DISP2, which is the DISP EN signal delayed two character times, is produced by sending DISP EN through the Video Latch to D flip-flop A35 and back through the Video Latch.

FUNCTION is the output signal that is received from the Display RAM Buffer via RD7. This signal goes high when an attribute is set by the operator.

CURSOR, DISP2, and FUNCTION are sent to the Video Logic.

4.8.9 Character Generator A23 (Schematic P3)

The Character Generator consists of an EPROM which is programmed with the 128 upper and lower-case displayable characters in the ASCII code.

The characters to be displayed are specified by the inputs A4-A10 produced by the Displa

RAM Buffer. The raster line count is specified by CA0-CA3.

The Character Generator uses A4-A10 and CA0-CA3 as address inputs and outputs 01-07 which are routed to the Parallel-to-Serial Converter before being sent to the Video Logic.

The Character Generator is enabled by character generator enable signals CE and DE.

Input All, when high, indicates that a GRAPHIC character is to be produced.

4.8.10 Video Logic (Schematic P3)

The Video Logic conditions the data containing the character to be displayed, character attributes, and display attributes into the signal VIDEO, which is displayed on the CRT.

The HSYNC, VIDEO, and VSYNC are routed to the CRT via connector J1.

Information produced by the Character Generator is routed to the Video Logic over 00-07. This information is loaded into the Parallel-to-Serial Converter (chip A15) by the video timing (1.8432 MHz) which is attached to S/L. From the Parallel-to-Serial Converter, the data is clocked out by the video timing (16.588 MHz) and used to produce the VIDEO serial data dot pattern. The bit pattern is clocked out in the order A-H. All bits are clocked out on the trailing edge before loading a new character.

Data signals DB0-DB7 are clocked through the Video Logic Latch A33 from the CPU section to the Video Logic. DB0-DB7 define attributes that the operator selects.

DB0 produces the BLINKING attribute. When BLINKING is high, the cursor will blink at 1/64 of the field rate.

DB1 produces the UNDERLINE attribute. When UNDERLINE is high, an underline appears on raster line 11.

DB2 produces the DUAL INTENSITY attribute. When DUAL INTENSITY is low, normal brightness appears on the CRT. When high, the brightness is reduced.

DB3 produces INVERSE. When INVERSE is high, the lighting of the current character is the reverse of the rest of the screen. That is, if the INVERSE SCREEN causes light characters to be shown on a dark background, then setting INVERSE high causes the current character to appear dark on a light background and vice versa.

DB4 produces INVERSE SCREEN. When INVERSE is low, normal display is enabled (light characters on a dark background). INVERSE high produces reverse display (dark characters on a light background).

DB5 produces INHIBIT. When INHIBIT is low, VIDEO is inhibited (the screen is blanked).

DB6 produces EIA/CURRENT LOOP which is sent to the External Interface section. When this signal is high, the modem port is enabled for RS-232-C communication. When this signal is low, current loop operations are enabled.

DB7 produces GRAPHIC which is sent to the Character Generator. When GRAPHIC is high, the graphic mode of characters is enabled.

FUNCTION, which is output by the Video Latch A32, permits attributes to be combined with the character dot pattern when it is high.

VSYNC passes through a Divide-by-16 Counter and two Divide-by-Two Counters which divide the signal by 64. This signal is then gated with other attributes.

Once all of the attributes have been determined, they are gated with the serial dot pattern that is produced by the Parallel-to-Serial Converter to produce the VIDEO signal which is sent to the monitor via pin 3 of connector J.

4.8.11 ADM 22 Buzzer (Schematic P2)

The **MDT 20** buzzer (bell) is sounded when OUT1 from the CPU section is low.

SECTION V

5.1 MDT20 TERMINAL

The MDT 20 terminal is comprised of two main assemblies, the terminal assembly and the keyboard assembly.

The terminal assembly contains the following seven field replacement sub-assemblies:

1. Housing assembly
2. Power Supply assembly
3. CRT/Yoke assembly
4. CRT Board/Monitor Board assembly
5. Main Logic Board assembly
6. Transformer assembly
7. ON/OFF Switch/Contrast Control assembly

The keyboard assembly contains the following two field replacement assemblies:

1. Keyboard assembly
2. Housing assembly

Refer to **figure 5-1** for all of the field replacement assemblies within the terminal housing.

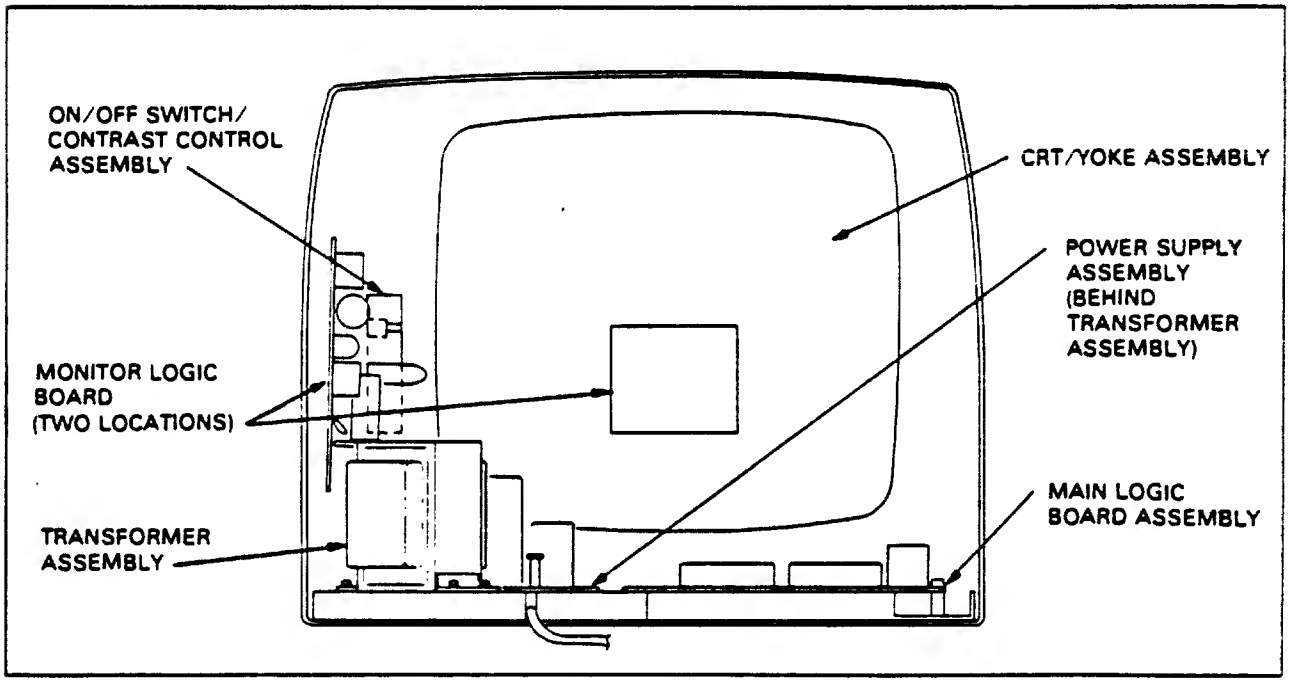

Figure 5-1. MDT 20 *Field Replaceable Assemblies*

5.2 REAR HOUSING REMOVAL/ REPLACEMENT

Step 1: Remove the two screw covers from the top of the unit (refer to figure 5-2 for locations). These covers must be removed by lifting upwards from the back or the retaining tabs will be broken off.

Step 2: Place the MDT 20 terminal on it s face (care should be taken to prevent scratching of CRT or front bezel assembly.

Step 3: Remove the two phillips screws from the top of the terminal assembly.

Step 4: Remove the six phillips/hex head screws from the bottom of the terminal.

Step 5: Remove the rear housing from the terminal assembly.

Step 6: Installation of the rear housing is accomplished by reversing steps 1-5.

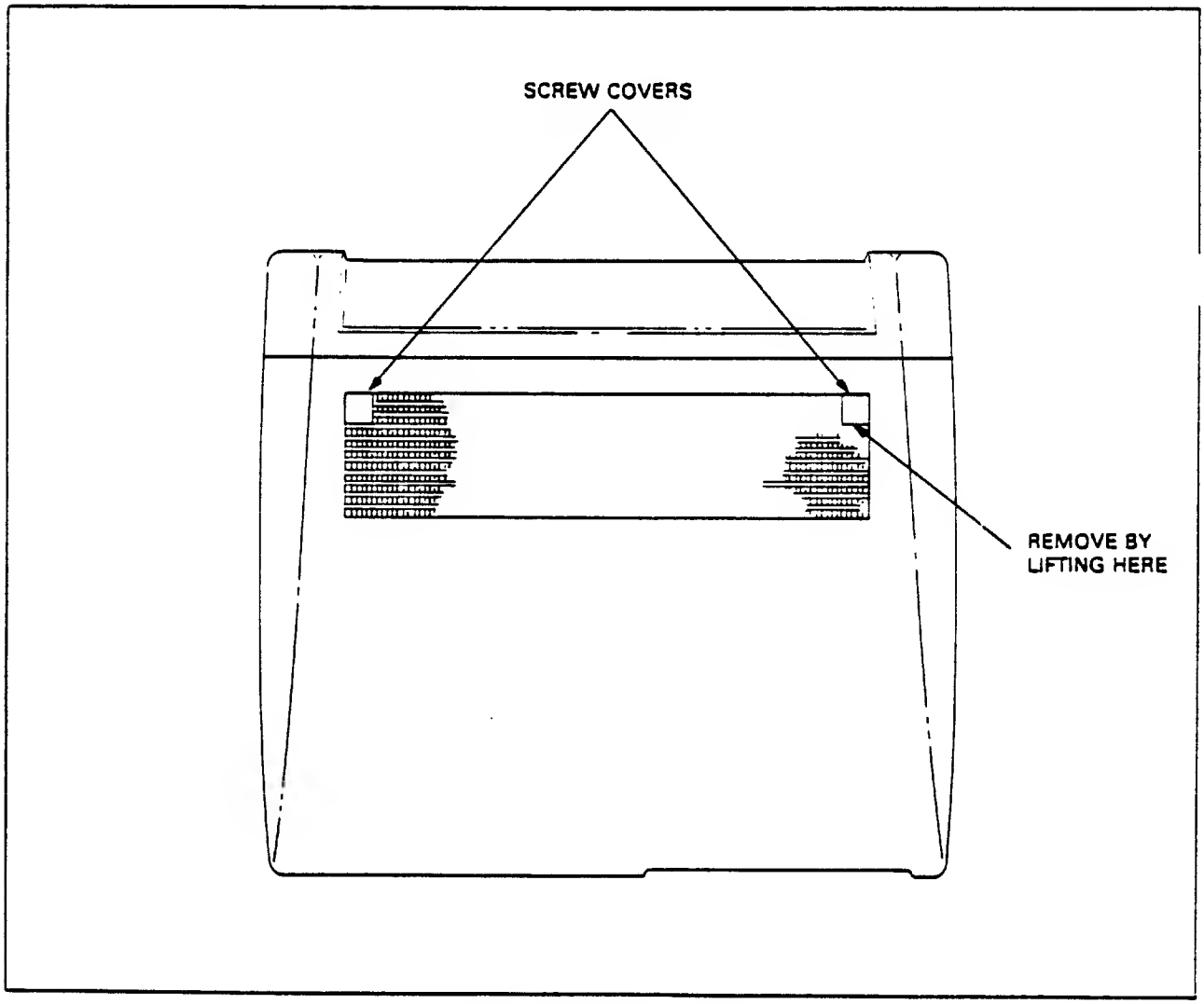

Figure 5-2. Rear Housing

5.3 MDT20 POWER SUPPLY

The Power Supply used in the MDT 20 terminal is a linear design type power supply capable of generating three different voltage levels. All of these voltage levels are self regulating and are not adjustable, whenever any of these voltages fall outside of their tolerances, the power supply should be replaced. The power supply assembly contains three fuses for over voltage protection. Refer to **Table 5-1** for all power supply voltage levels and where they are used. Refer to **Table 5-2** for all power supply voltage levels and their tolerances. Refer to **Table 5-3** for pin numbers, color codes, signals, origins and destinations of the power supply cable. Refer to **Table 5-4** for fuse designations, ratings, and the circuitry they protect. Refer to **figure 5-3** for a pictorial layout of the power supply board.

Table 5-1.

VOLTAGE LEVELS	USED ON
+5 Volts	Main logic board and keyboard assemblies
+15 Volts	Main logic board and CRT board/Monitor board assemblies
-12 Volts	Main logic board assemblies

Table 5-2.

VOLTAGE LEVELS	TOLERANCES
+5 Volts	+4.75 to +5.25 Volts
+15 Volts	+14.25 to +15.75 Volts
-12 Volts	-11.40 to -12.60 Volts

Table 5-3.

POWER SUPPLY	MAIN LOGIC BOARD	SIGNAL NAME	WIRE COLOR
Soldered	P2	+15 Volts	Yellow
Soldered	P3	-12 Volts	White
Soldered	P5	+5 Volts	Red
Soldered	P6	Ground	Black

Table 5-4.

DESIGNATION	FUSE VOLTAGE RATING	FUSE AMPERAGE RATING	PROTECTS
F1	250 Volts	0.75 Amperage	230 Volt line
F1	250 Volts	1.25 Amperage (slow blow)	115 Volt line
F601	250 Volts	2.0 Amperage	+5 Volt line
F602	250 Volts	2.0 Amperage	+15 Volt line

5.4 POWER SUPPLY REMOVAL/ REPLACEMENT

Step 1: Gently push forward on the front bezel assembly.

Step 2: Remove the CRT logic board from its mounting slots and place it out of the way.

Step 3: Remove the four-wire cable assembly labeled P1-P6 from the main logic board.

Step 4: Remove the six-wire cable assembly labeled A1-A6.

*Step 5: Remove the two-wire cable assembly labeled AC1-AC2.

*Step 6: Remove the two-wire cable assembly labeled T1-T2.

*Step 7: Remove the one-wire cable assembly labeled X.

*Step 8: Remove the one-wire cable assembly labeled B.

Step 9: Remove the two phillips/hex head screws securing the back of the power supply to the lower case assembly.

Step 10: Slide the power supply assembly towards the rear of the unit until the front portion of the power supply clears it's hold down slots.

Step 11: Installation of the new power supply is accomplished by reversing steps 1-10.

*Note these cables are held in place by a glue substance, flexing of the glued plugs will crack the glue.

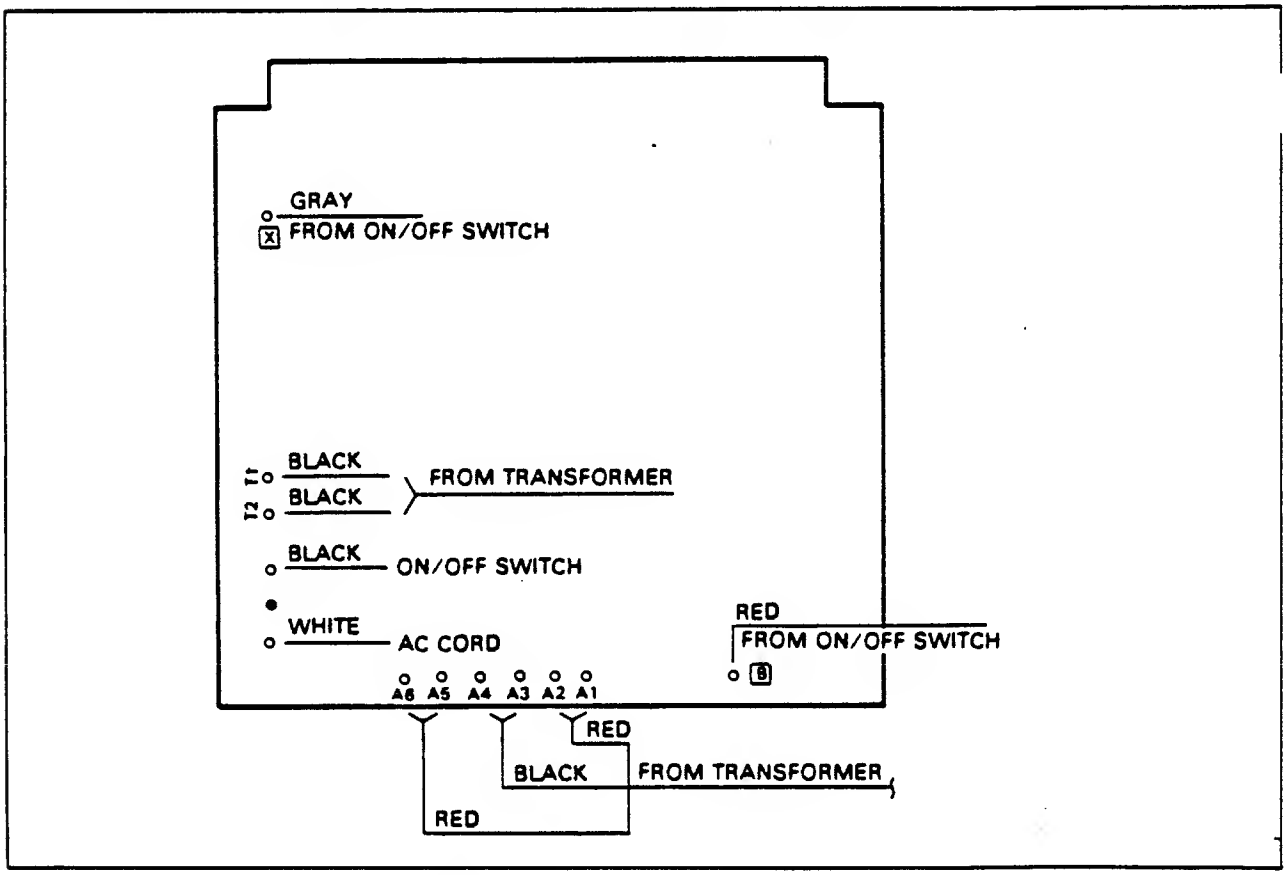

Figure 5-3. Power Supply Assembly

5.5 MONITOR ASSEMBLY

The Monitor assembly used in the MDT 20 terminal is manufactured by TECO ELEC. & MACH CO., LTD. The Monitor assembly is constructed from two main subassemblies. The CRT assembly, and the CRT Board/Monitor Board assembly.

5.6 CRT ASSEMBLY REMOVAL AND REPLACEMENT PROCEDURES

The CRT assembly consists of a P31 green phosphor direct etched tube, an attached tension band with mounting lugs, and a yoke assembly. The tension band is designed to provide implosion protection. The yoke assembly consists of two separate laminated wire coils mounted to a plastic support base, pin-cushioning magnets, and centering ring magnets. Horizontal and vertical drive signals are supplied to the yoke by the CRT logic board. These signals are used by the yoke to deflect the electron beam (inside the CRT) to properly "paint" the screen. The horizontal drive signal is supplied by the blue and orange wires. The vertical drive signal is supplied by the red and black wires. All of the wires are permanently soldered to the yoke assembly. However, the ends connecting to the CRT logic board are terminated with connectors, providing a means of separating the sub-assemblies. The pin-cushioning magnets are cemented to the yoke during manufacturing to ensure proper "painting" of the screen. The centering ring magnets are mounted at the base of the yoke assembly. Each may be rotated on its axis until the display is properly centered in the terminal's bezel. The CRT assembly is held in place inside the front bezel assembly by four phillips/hex head screws and washers. Caution should always be used when replacing the CRT assembly; it can and will act like a large capacitor, storing a charge of up to 11.5k volts. The CRT assembly should always be properly discharged prior to its removal from the terminal.

Step 1: Gently remove the keyed socket monitor board from the neck of the CRT.

Step 2: Disconnect the horizontal and vertical yoke wires from the H1-H2 and V1-V2 locations on the CRT board.

Step 3: Using an appropriately grounded device, discharge and disconnect the flyback anode from the top of the CRT.

Step 4: Remove the diag spring from the upper left hand corner of the CRT assembly by removing its phillips/hex head retaining screws.

Step 5: Remove the three remaining phillips/hex head retaining screws.

Step 6: Remove the CRT assembly.

Step 7: Installation of the new CRT/Yoke assembly is accomplished by reversing steps 1-6.

5.7 CRT LOGIC BOARD/MONITOR BOARD REMOVAL/REPLACEMENT

The CRT Logic board/Monitor board assembly contains the controls for adjusting focus, sub-brightness, vertical hold, vertical size, vertical linearity, horizontal width and horizontal linearity. This assembly also contains the flyback transformer required to generate the high voltage (11.5k volts) necessary to drive the CRT. Refer to **Table 5-5** for all adjustable components, their designators and the signals they control. Refer to **figure 5-4** for a pictorial layout of the TECO CRT logic board. Refer to **Table 5-6** for pin numbers, color codes, signals, origins and destinations of the CRT logic board/monitor board cables.

Step 1: Gently push forward on the front bezel assembly.

Step 2: Remove the CRT logic board from its mounting slot by sliding it towards the rear of the unit.

*Step 3: Remove the three-wire brightness cable labeled BR BR.

*Step 4: Remove the two-wire diag grounding cabled JJ JJ.

*Step 5: Remove the two-wire horizontal yoke cable labeled H1 H2.

*Step 6: Remove the two-wire vertical yoke cable labeled V1 V2.

*Step 7: Remove the monitor board from the back of the CRT neck.

*Step 8: Remove the power wire labeled Z.

Step 9: Remove ground wire from transformer base.

Step 10: Remove the flyback anode from the top of the CRT.

Step 11: Installation of the new CRT/ Monitor board assembly is accomplished by reversing steps 1-10.

*Note these cables are held in place by a glue substance, flexing of the glued plugs will crack the glue.

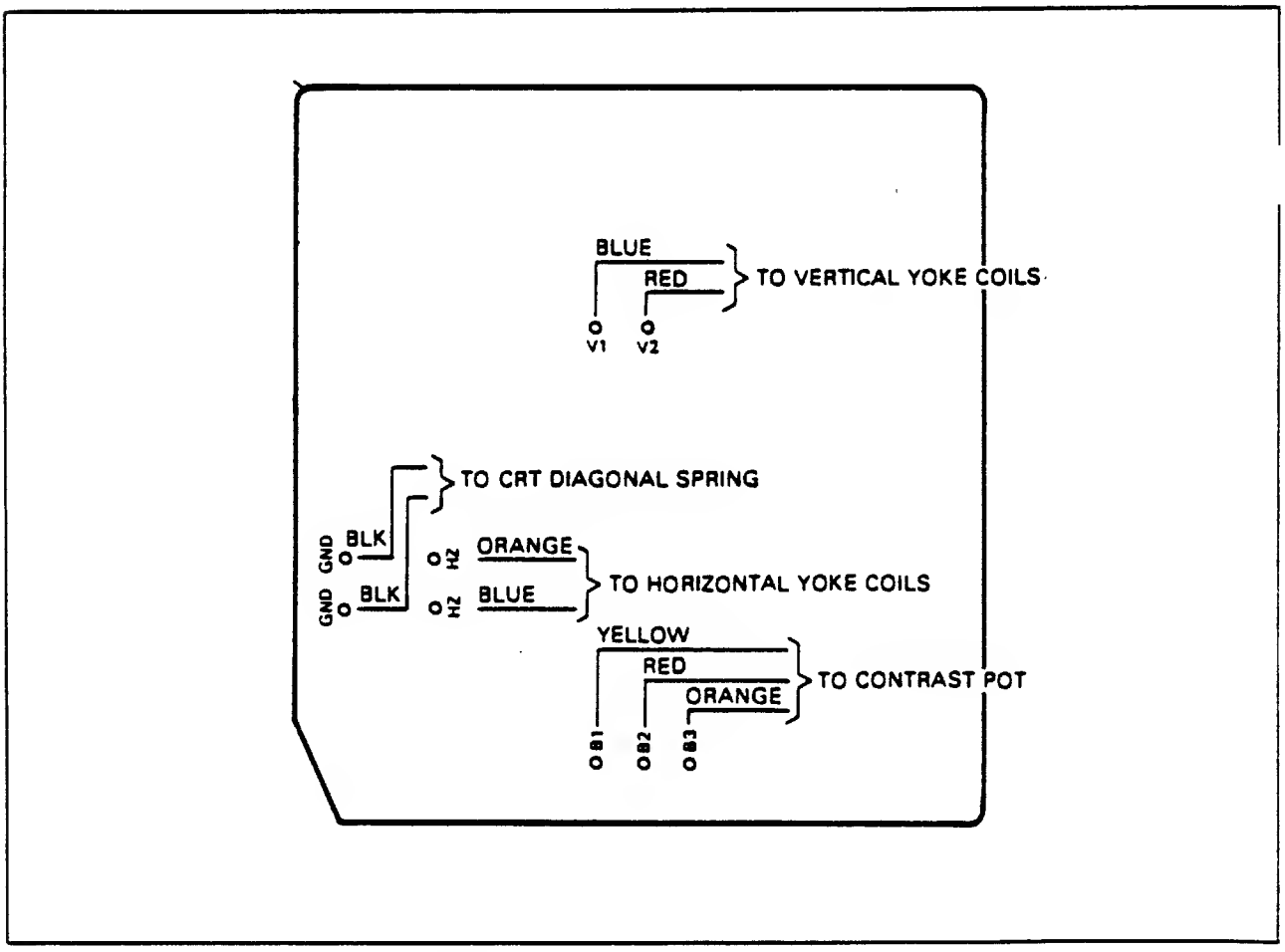

Figure 5-4. **MDT 20** *CRT Logic Board*

Table 5-5.

COMPONENT TYPE	DESIGNATION	SIGNAL NAME
Potentiometer	VR401	Vertical Hold
Potentiometer	VR402	Vertical Side
Potentiometer	VR403	Vertical Linearity
Potentiometer	VR501	Focus
Potentiometer	VR502	Sub Brightness
Coil	L503	Horizontal Width
Coil	L504	Horizontal Linearity

Table 5-6.

CRT LOGIC BOARD	DESTINATION	SIGNAL NAME	WIRE COLOR
B1	Contrast Pot	Contrast	Yellow
B2	Contrast Pot	Contrast	Red
B3	Contrast Pot	Contrast	Orange
H1	Horizontal Yoke Coil	Horizontal Drive	Orange
H2	Horizontal Yoke Coil	Horizontal Drive	Blue
V1	Vertical Drive Coil	Vertical Drive	Blue
V2	Vertical Drive Coil	Vertical Drive	Red
GND	Diag Spring	Ground	Black
GND	Diag Spring	Ground	Black
N/A	Transformer Base	Ground	Green/Yellow
Z	On/Off Switch	+15V	Yellow

All CRT logic board adjustments should be made using the following procedures:

SUB BRIGHTNESS: The sub-brightness control should be adjusted to a point where the white raster is just extinquished. The contrast control should be turned all the way OFF prior to the sub-brightness adjustment.

VERTICAL: There is a slight interaction between the vertical hold, size and linearity controls. A change in the height of the screen may affect linearity. Make small alternating adjustments to each pot until the desired screen is acheived.

HORIZONTAL WIDTH: Adjust the screen horizontal width by turning the Core of Coil L603 until the desired screen width is acheived.

HORIZONTAL LINEARITY: When character width variations are observed in characters located on the same row, turn the Core of Coil L504 until the character widths become uniform.

FOCUS: Minor adjustments to the overall screen display focus may be made by adjusting VR501. The Dynamic Focus Coil L505 should not be adjusted.

5.8 MAIN LOGIC BOARD REMOVAL/REPLACEMENT

The MDT 20's logic board is designed around the 8085 microprocessor. This 40-pin microprocessor is located in a socket at board location A26. The logic board's operating code (OP CODE) is located in a socket at board location A44. The operating systems memory (scratch pad memory) is located in a single 24-pin 6116P-3 RAM at board location A45. The logic boards display memory is located in a single 24-pin 6116P-3 RAM at board location A21. The logic boards CRT timing information is handled by the 40-pin CRTC I.C. located at board location A31. The logic board character generation is handled by the 24-pin, character generator or ROM located in a socket at board location A23. Refer to **figure 5-5** for a drawing layout of the logic board. Refer to **Table 5-7** for the logic board modem port's pin out. Refer to **Table 5-8** for the printer ports pin out. Refer to **Table 5-9** for the keyboard port pin out. Refer to **Table 5-10** for the logic boards video outputs to the monitor assembly.

Table 5-7.

MODEM PORT		
PIN OUT	SIGNAL NAME	DIRECTION
1	Chassis Ground	N/A
2	Transmit Data	Output
3	Receive Data	Input
4	Request to Send	Output
5	Clear to Send	Input
6	Data Set Ready	Input
7	Signal Ground	N/A
20	Data Terminal Ready	Output
23	Current Loop Receive ±	Input
25	Current Loop Receive ±	Input
17	Current Loop Transmit ±	Output
24	Current Loop Transmit ±	Output

Table 5-8.

PRINTER PORT		
PIN OUT	SIGNAL NAME	DIRECTION
1	Chassis Ground	N/A
2	Auxiliary Receive Data	Input
3	Auxiliary Transmit Data	Output
4	Auxiliary Request to Send	Input
5	Auxiliary Clear to Send	Output
6	Auxiliary Data Set Ready	Output
7	Signal Ground	N/A
20	Auxiliary Data Terminal Ready (Busy Low)	Input

Table 5-9.

KEYBOARD PORT		
PIN OUT	SIGNAL NAME	DIRECTION
1	Cap Lock	Input
2	Ground	N/A
3	Serial Data	Input
4	+5 Volts	Output
5	Ground	N/A

Table 5-10.

LOGIC BOARD PIN OUT	SIGNAL	WIRE COLOR	CRT LOGIC BOARD
1	+15 Volts	Yellow	Soldered
2	Ground	Black	Soldered
3	Video	White	Soldered
4	Ground	Copper Stranded	Soldered
5	Horizontal Sync	Blue	Soldered
6	Vertical Sync	White	Soldered

Step 1: Remove the six-wire cable assembly labeled S1-S6.

Step 2: Remove the four-wire cable assembly labeled P1-P6.

Step 3: Remove the two phillips/hex head screws securing the back of the logic board assembly to the lower housing assembly.

Step 4: Slide the logic board assembly towards the rear of the unit until the front portion of the logic board assembly clears it's hold down slots.

Step 5: Installation of the new logic board is accomplished by reversing steps 1-4.

5.9 TRANSFORMER REMOVAL/ REPLACEMENT

Step 1: Remove the six-wire transformer cable assembly labeled A1-A6 from the power supply board.

Step 2: Remove the two-wire transformer cable assembly labeled T1-T2 from the power supply board.

Step 3: Remove the four phillips/hex head screws securing the transformer to the bottom housing assembly.

Step 4: Remove the four grounding wires and two securing plates.

Step 5: Remove transformer.

Step 6: Installation of the new transformer is accomplished by reversing steps 1-5.

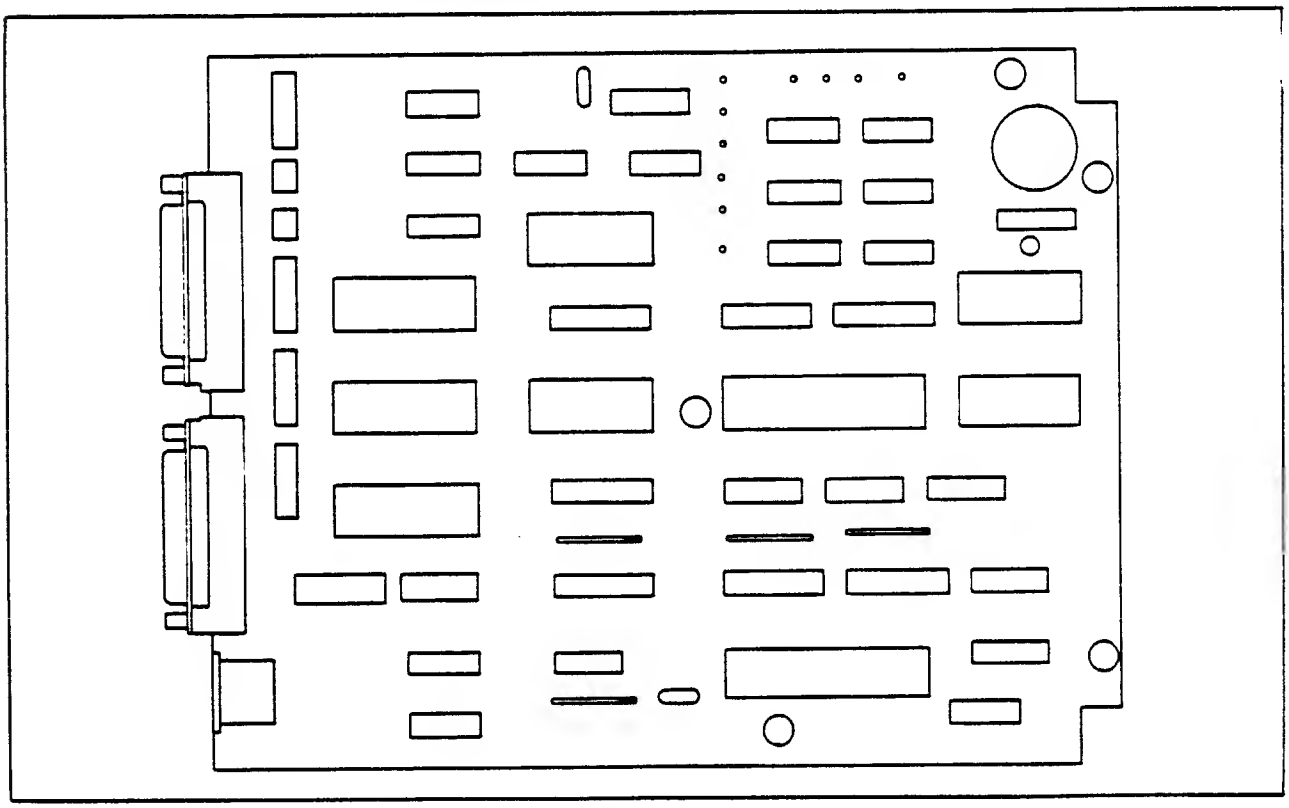

Figure 5-5. **MDT 20** *Main Logic PCBA*

5.10 ON-OFF SWITCH/CONTRAST PORT ASSEMBLY REMOVAL/ REPLACEMENT

Step 1: Remove the CRT logic board from its mounting slots and place it out of the way.

Step 2: Remove the gray wire labeled X from the power supply board.

Step 3: Remove the red wire labeled B from the power supply board.

Step 4: Remove the yellow wire labeled Z from the monitor board.

Step 5: Remove the three wire contrast assembly cable labeled BR BR from the CRT logic board.

Step 6: Unsolder the small diameter black line cord wire (refer to **figure 5-6** for clarification).

Step 7: Unsolder the large diameter black power supply wire. (Refer to **figure 5-6** for clarification).

Step 8: Remove the three phillips/hex head retaining screws.

Step 9: Remove the contrast knob by pulling forward.

Step 10: Remove the ON/OFF Switch/ Contrast pot assembly.

Step 11: Installation of the new ON/OFF Switch/Contrast pot assembly is accomplished by reversing steps 1-10.

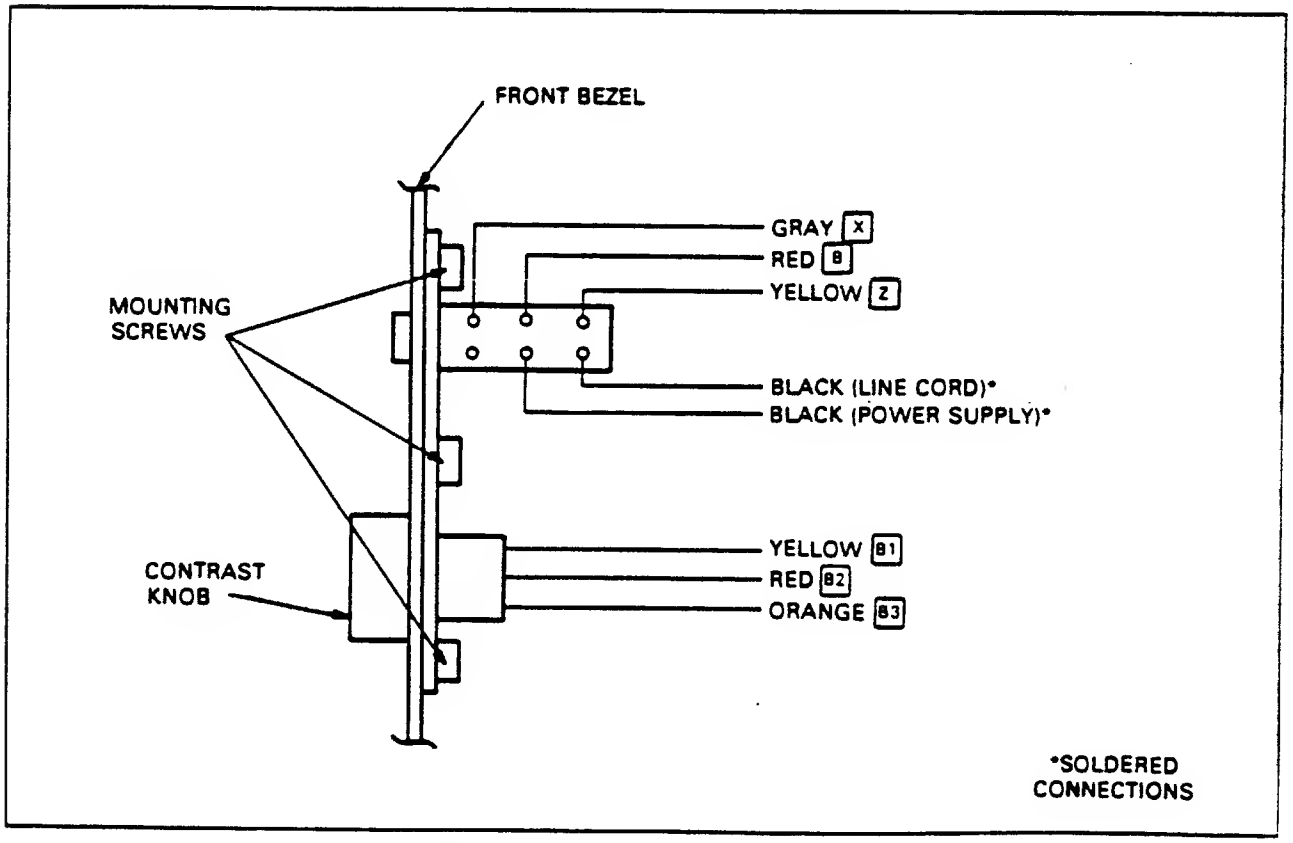

Figure 5-6. ON/OFF Switch/Contrast Pot Assembly

5.11 KEYBOARD REPLACEMENT

Step 1: Place the keyboard assembly on its face and remove the four phillips/hex head screws securing the bottom housing.

Step 2: Remove the bottom housing from the keyboard assembly.

Step 3: The keyboard interface cable is held in place with a metal strain relief and two phillips/hex head screws. Remove one of these screws, loosen the remaining screw and rotate the strain relief plate 90.

Step 4: Remove the four phillips/hex head screws securing the keyboard assembly to the top housing.

Step 5: Remove the keyboard assembly from the top housing.

Step 6: Installation of the new keyboard assembly is accomplished by reversing steps 1-5.

5.12 FAILURE ANALYSIS

Trouble shooting of the MDT 20 terminal is straight forward and conventional. Listed below are suggested steps to be followed in trouble shooting a customers complaint.

Step 1: The terminal's serial number should be checked and varified. This will eliminate the possibility of working on the wrong terminal.

Step 2: Check the terminal's SMD number. This will tell you if the terminal was manufactured as a standard terminal, or as a special terminal.

Step 3: Check with the customer, find out all the information you can about the failure.

Step 4: Operate the terminal, try and duplicate the customer's reported problem.

Step 5: Isolate the cause of the failure, replace the malfunctioning module or make the necessary adjustments.

Step 6: Test the terminal off line.

Step 7: Have the customer check out the terminal on line, varify that the terminal is working properly.

When the terminal is used in it's RS-232-C interface mode, a good trouble shooting tool is the wraparound plug (modem pins 2 & 3 are tied together). This plug can be used in either the half or full duplex modes of operation. In the half duplex mode, when a character is typed two characters should appear on the display. In the full duplex mode, when a character is typed only one character should appear on the screen. Refer to **Table 5-11** for additional trouble shooting information.

Table 5-11.

SYMPTOM	POSSIBLE CAUSE	ACTION TAKEN
Terminal does not have a cursor.	Blown Fuse/Fuses	Replace Fuse
	Power Supply	Replace Power Supply
	Main Logic Board	Replace Main Logic Board
	CRT Logic Board	Replace CRT Logic Board
Terminal has collapsed video (horizontal or vertical)	Main Logic Board	Replace Main Logic Board
	CRT Logic Board	Replace CRT Logic Board
Terminal will not transmit (Video is good.)	Main Logic Board	Replace Main Logic Board
	RS-232-C Cable	Replace RS-232-C Cable
Terminal will not receive (Video is good.)	Main Logic Board	Replace MainLogic Board
	RS-232-C Cable	Replace RS-232-C Cable
Terminals keys bounce	Main Logic Board	Replace Main Logic Board
	Keyboard	Replace Keyboard
Terminal receives and transmits garbled data.	Main Logic Board	Replace Main Logic Board
	Terminal Set-Up	Check Terminal Set-Up Mode
	RS-232-C Cable	Replace RS-232-C Cable

SECTION VI
REFERENCE DRAWINGS

6.1 REFERENCE DRAWINGS

The reference drawings required for servicing the **MDT 20** video display terminal are included in numerical sequence in this section. These drawings include the schematics, wiring diagrams, and miscellaneous drawings as listed below:

DRAWING TITLE

MDT 20 ASSEMBLY

Schematic, Main Logic Board 77242000D31
Schematic, Keyboard 77242000K13-03
Schematic, Power Supply 77242000A13
Schematic, Monitor PWB 77800554431-03
Schematic, Key Matrix..... 77800554431-03
Schematic, Key Matrix.....77242000K13-04

Enlarged copies of these drawings accompany the manual for your convenience.

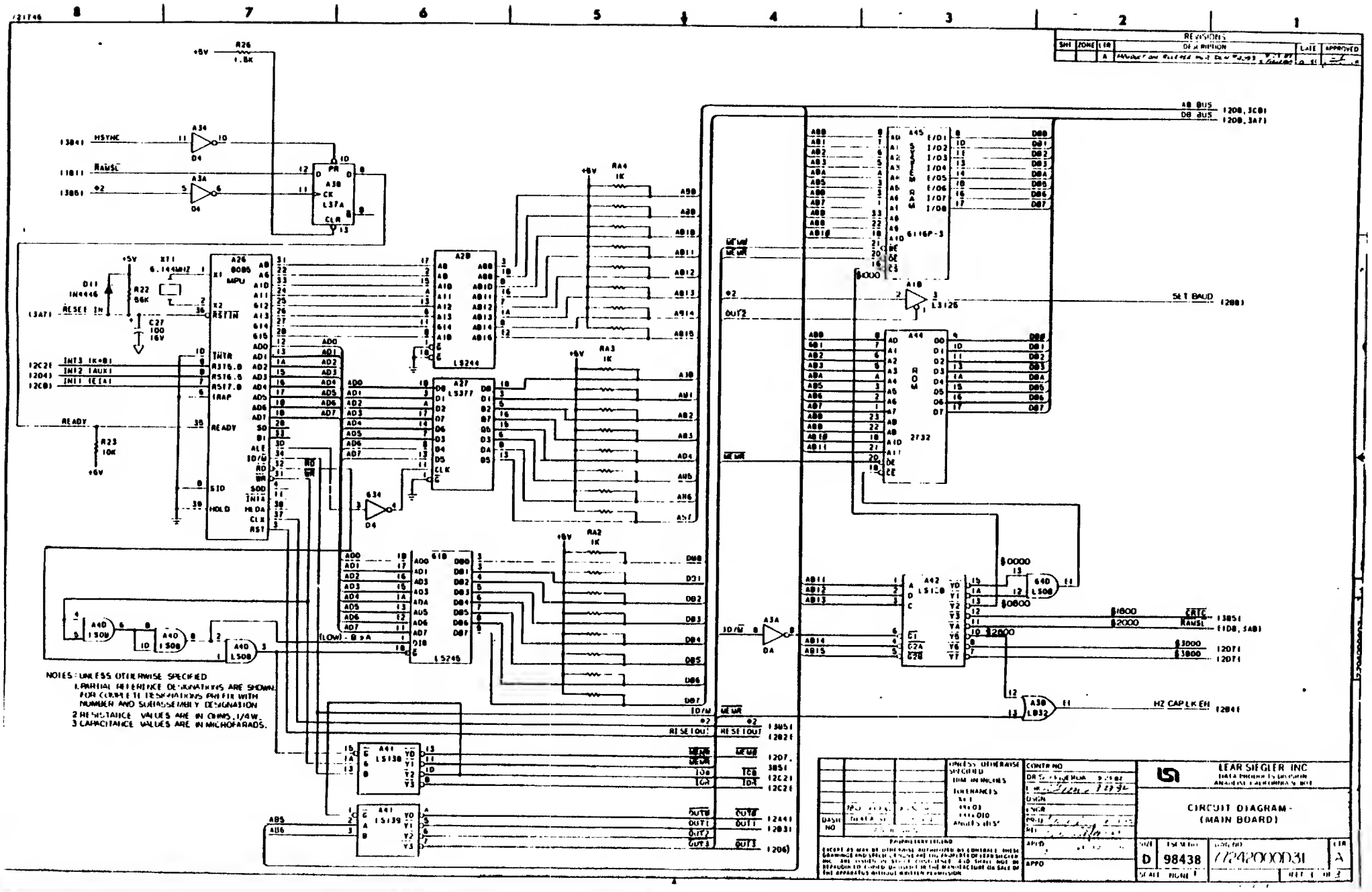

REVISIONS
SHT ZONE LTR DESCRIPTION DATE APPROVED
A
A26 8085 MPU
A28 LS244
A27 LS377
A18 LS245
A41 LS138
A41 LS139
A45 6116P-3
A44 2732
A42 LS138
A10 LS125
A40 LS08
A34
A3A
A38 PR CK CLR L37A
A34 D4
A3A D4
A3A DA
A34 D4
A40 LS08
A40 LS08
A40 LS08
A38 LS32
A40 LS08
R26 1.8K
R22 56K
R23 10K
R4 1K
R3 1K
R2 1K
C27 100 16V
D11 1N4446
XT1 6.144MHZ
+5V
HSYNC
RAMSL
RESET IN
READY
INT3 (K+B)
INT2 (AUX)
INT1 (EIA)
INTR
RST7.5
RST6.5
RST5.5
TRAP
SID
SOD
INTA
HLDA
CLK
RST
HOLD
ALE
IO/M
RD
WR
X1
X2
RESIN
AB BUS
DB BUS
SET BAUD
CRTC
RAMSL
HZ CAP LK EN
RESETOUT
OUT2
MEMR
MEMW
IOR
IOW
OUT0
OUT1
OUT2
OUT3
$1800
$2000
$3000
$3800
$0000
$0800
$2800
$1000
NOTES: UNLESS OTHERWISE SPECIFIED
1. PARTIAL REFERENCE DESIGNATIONS ARE SHOWN. FOR COMPLETE DESIGNATIONS PREFIX WITH NUMBER AND SUBASSEMBLY DESIGNATION
2. RESISTANCE VALUES ARE IN OHMS, 1/4W.
3. CAPACITANCE VALUES ARE IN MICROFARADS.
UNLESS OTHERWISE SPECIFIED
DIM IN INCHES
TOLERANCES
ANGLES ±1/2°
PROPRIETARY LEGEND
LEAR SIEGLER INC
DATA PRODUCTS DIVISION
ANAHEIM CALIFORNIA 92803
CIRCUIT DIAGRAM - (MAIN BOARD)
SIZE D
98438
77242000D31
LTR A
SCALE NONE
SHEET 1 OF 3

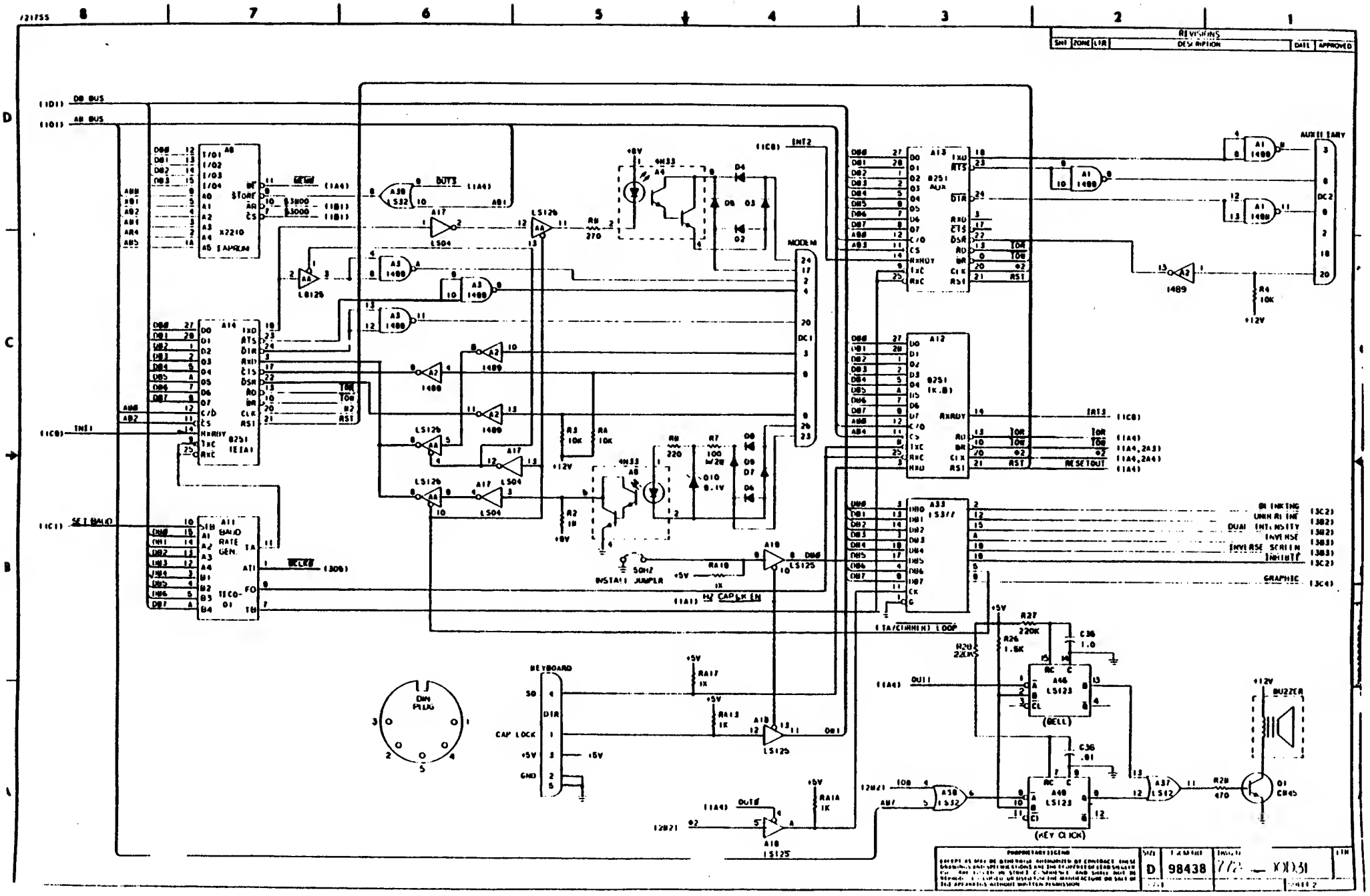

REVISIONS
SHT ZONE LTR DESCRIPTION DATE APPROVED
DB BUS
AB BUS
X2210 EAPROM
8251 (EIA)
BAUD RATE GEN.
TECO-01
MODEM
8251 AUX
8251 (K.B)
LS377
AUXILIARY
INSTALL JUMPER
50HZ
HZ CAPLK EN
(TA/CURRENT) LOOP
BLINKING
UNDERLINE
DUAL INTENSITY
INVERSE
INVERSE SCREEN
INHIBIT
GRAPHIC
KEYBOARD
DIN PLUG
CAP LOCK
(BELL)
(KEY CLICK)
BUZZER
PROPRIETARY LEGEND
D
98438

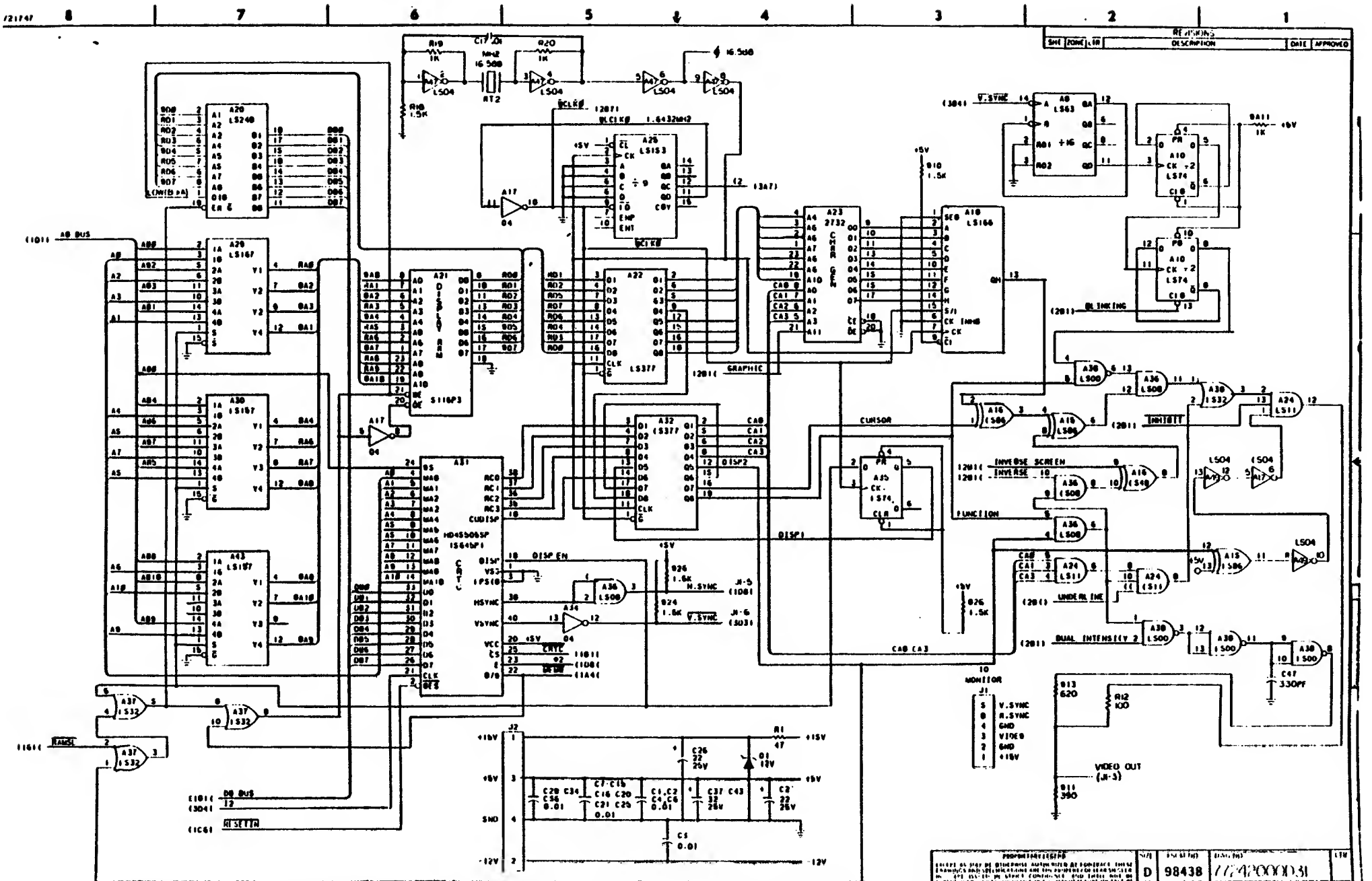

REVISIONS
SHT ZONE LTR DESCRIPTION DATE APPROVED
A20 LS240
A29 LS167
A30 LS157
A43 LS157
A21 DISPLAY RAM S116P3
A31 HD45505SP 1S645P1 CRTC
A25 LS153
A22 LS377
A32 LS377
A23 2732 CHAR GEN
A18 LS166
A8 LS63
A10 LS74
A35 LS74
A17 04
A34 04
A37 LS32
A36 LS08
A38 LS00
A24 LS11
A15 LS86
A16 LS86
A16 LS48
LS04
RT2
16.588
16.588
1.6432MHZ
DISP EN
H.SYNC
V.SYNC
CURSOR
GRAPHIC
BLINKING
INHIBIT
INVERSE SCREEN
INVERSE
FUNCTION
UNDERLINE
DUAL INTENSITY
MONITOR
J1
V.SYNC
H.SYNC
GND
VIDEO
GND
+15V
VIDEO OUT (J1-3)
J2
+15V
+5V
SND
-12V
RESETIN
RAMSL
DB BUS
AB BUS
LOW(B)
PROPRIETARY LEGEND
D
98438

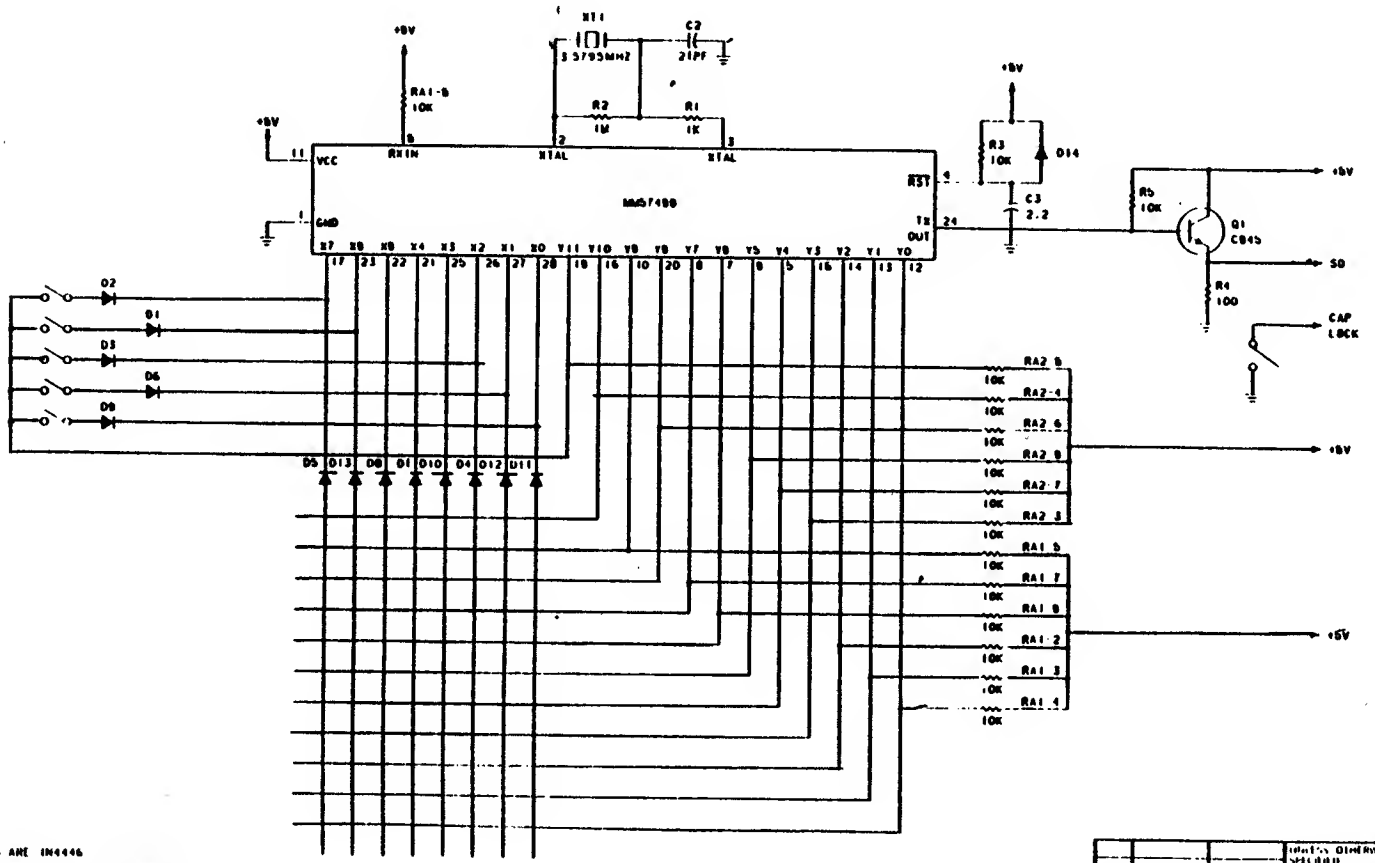

CAP LOCK
GND
VCC
SO
GND

4. ALL DIODES ARE IN4446
3. CAPACITANCE VALUES ARE IN MICROFARADS
2. RESISTANCE VALUES ARE IN OHMS
1. PARTIAL REFERENCE DESIGNATIONS ARE SHOWN. FOR COMPLETE DESIGNATION, PREFIX WITH UNIT NUMBER OR SUBASSEMBLY DESIGNATE

NOTES: UNLESS OTHERWISE SPE

LEAR SIEGLER INC

SCHEMATIC DIAGRAM
VA2000 KEY BOARD CKT.

D | 98438

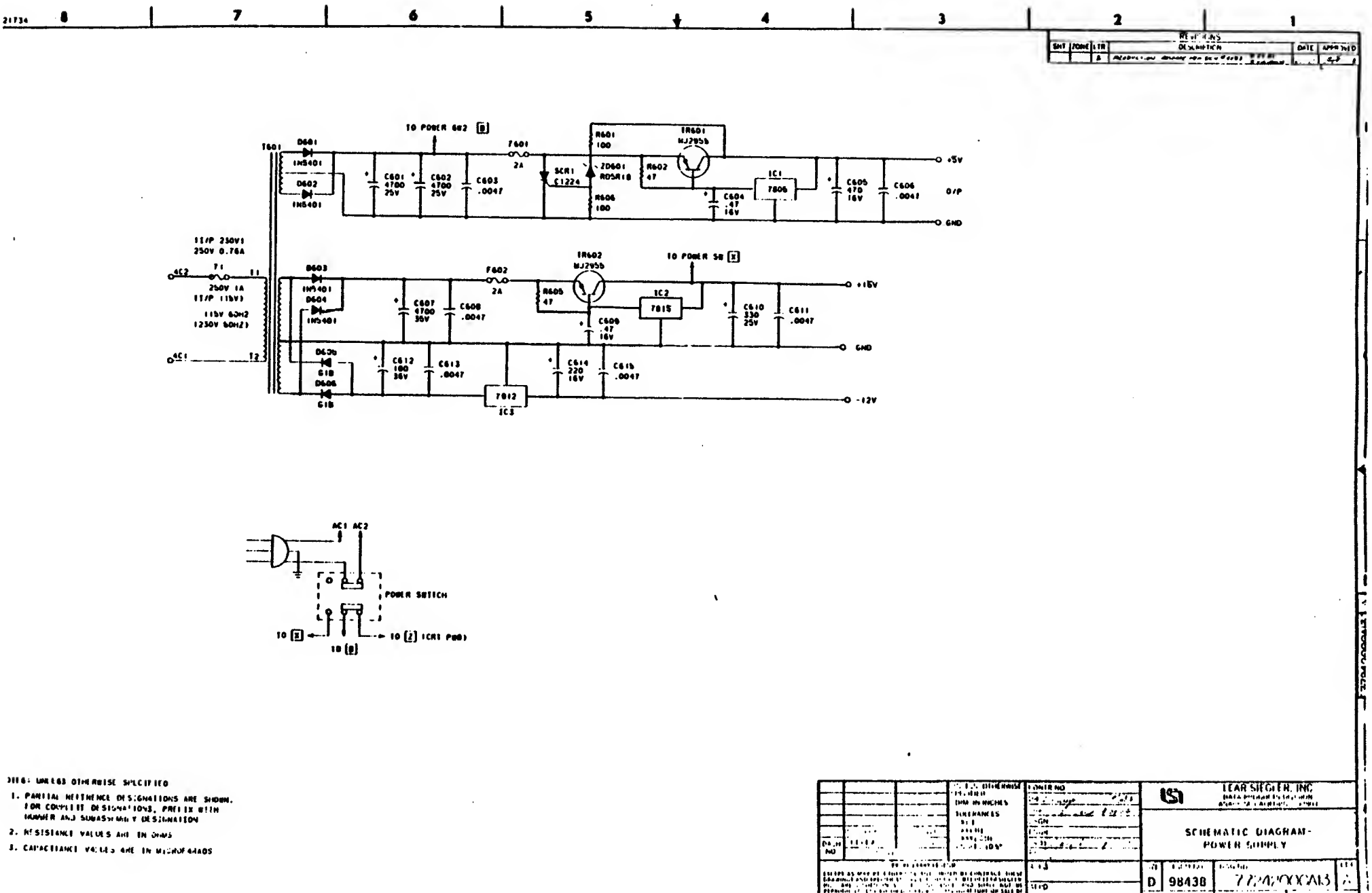

NOTES: UNLESS OTHERWISE SPECIFIED

1. PARTIAL REFERENCE DESIGNATIONS ARE SHOWN. FOR COMPLETE DESIGNATIONS, PREFIX WITH NUMBER AND SUBASSEMBLY DESIGNATION
2. RESISTANCE VALUES ARE IN OHMS
3. CAPACITANCE VALUES ARE IN MICROFARADS

LEAR SIEGLER, INC.

SCHEMATIC DIAGRAM-
POWER SUPPLY

D 98438 7724200CA13

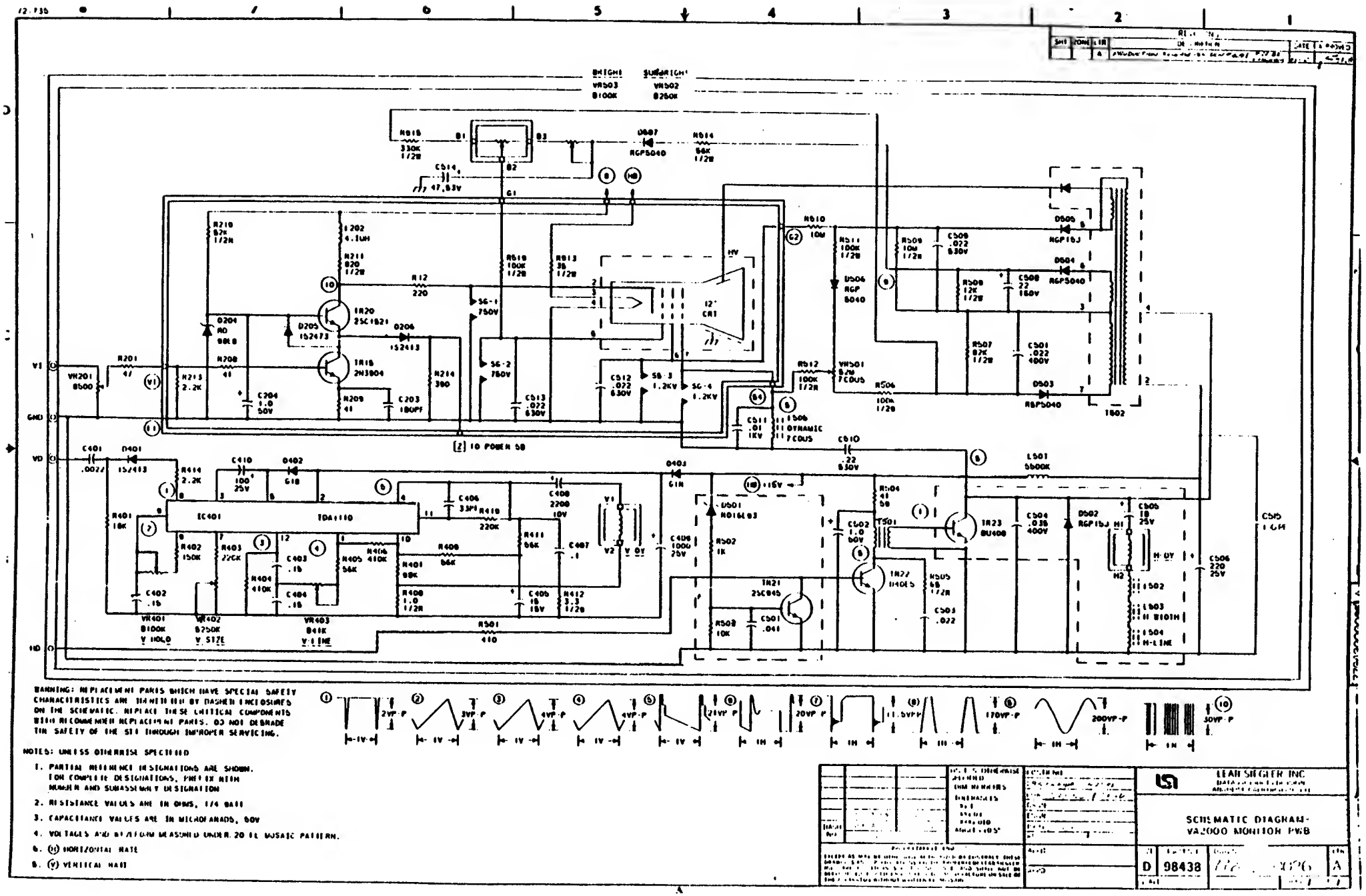

WARNING: REPLACEMENT PARTS WHICH HAVE SPECIAL SAFETY CHARACTERISTICS ARE IDENTIFIED BY SHADED ENCLOSURES ON THE SCHEMATIC. REPLACE THESE CRITICAL COMPONENTS WITH RECOMMENDED REPLACEMENT PARTS. DO NOT DEGRADE THE SAFETY OF THE SET THROUGH IMPROPER SERVICING.

NOTES: UNLESS OTHERWISE SPECIFIED

1. PARTIAL REFERENCE DESIGNATIONS ARE SHOWN. FOR COMPLETE DESIGNATIONS, PREFIX WITH NUMBER AND SUBASSEMBLY DESIGNATION
2. RESISTANCE VALUES ARE IN OHMS, 1/4 WATT
3. CAPACITANCE VALUES ARE IN MICROFARADS, 50V
4. VOLTAGES AND WAVEFORMS MEASURED UNDER 20 IRE MOSAIC PATTERN.
5. (H) HORIZONTAL RATE
6. (V) VERTICAL RATE

LEAR SIEGLER INC

SCHEMATIC DIAGRAM-
VA2000 MONITOR PWB

D 98438 A

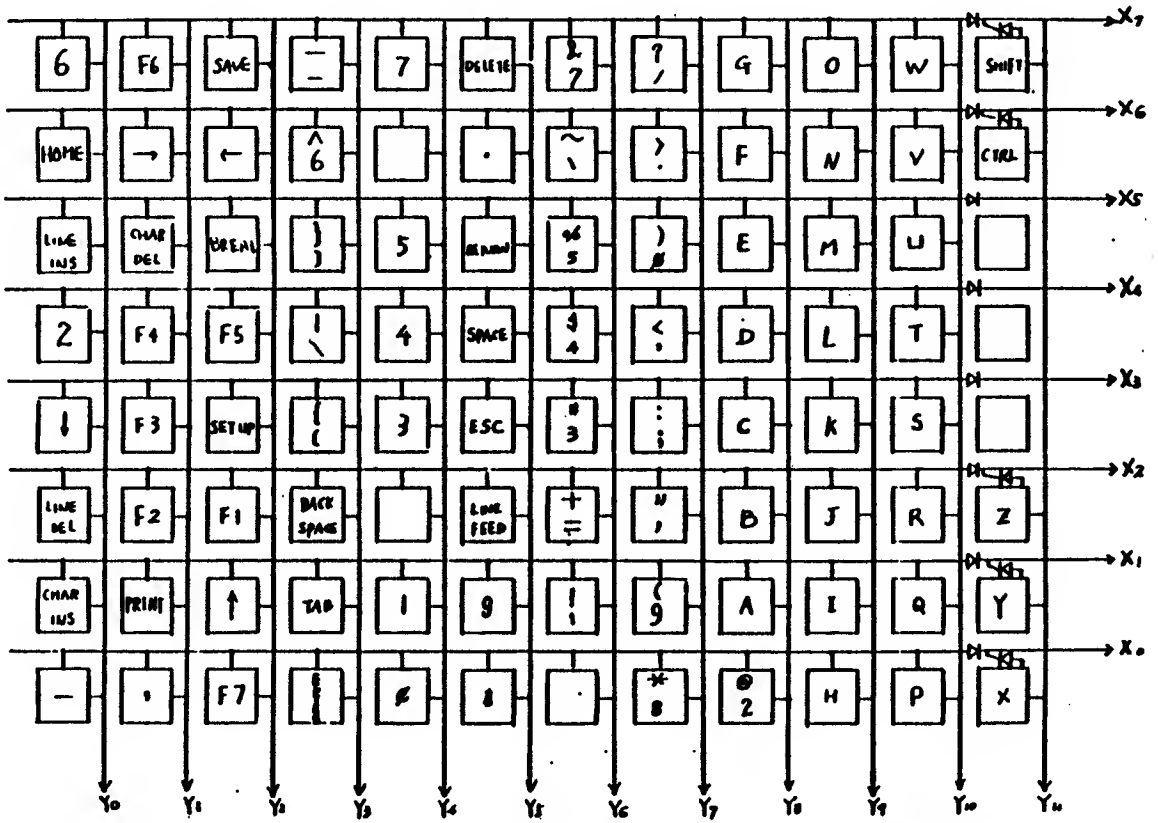

REVISIONS				
ZONE	LTR	DESCRIPTION	DATE	APPROVED
	A	PRODUCTION RELEASE PER ECN #4093 S. FIGUEROA 9-27-82	10-15-82	[illegible]

DASH NO.	NEXT ASSY	USED ON
—	7802000F322	DL136240
	APPLICATION.	

UNLESS OTHERWISE SPECIFIED
DIM. IN INCHES
TOLERANCES
.X ± .1
.XX ± .03
.XXX ± .010
ANGLES ± 0.5°
MACH. FIN.

CONTR NO.
DR S. FIGUEROA 9 27 82
CHK. [illegible]
DSGN
ENGR
PROJ [illegible]
REL
APPD
APPD

LEAR SIEGLER, INC.
ELECTRONIC INSTRUMENTATION DIVISION
ANAHEIM, CALIFORNIA 92803

SCHEMATIC DIAGRAM
ADM 22 KEY MATRIX

SIZE	CODE IDENT NO.	DWG NO.	LTR
B	98438	77800554431-03	A

SCALE
SHEET 1 OF 1

356

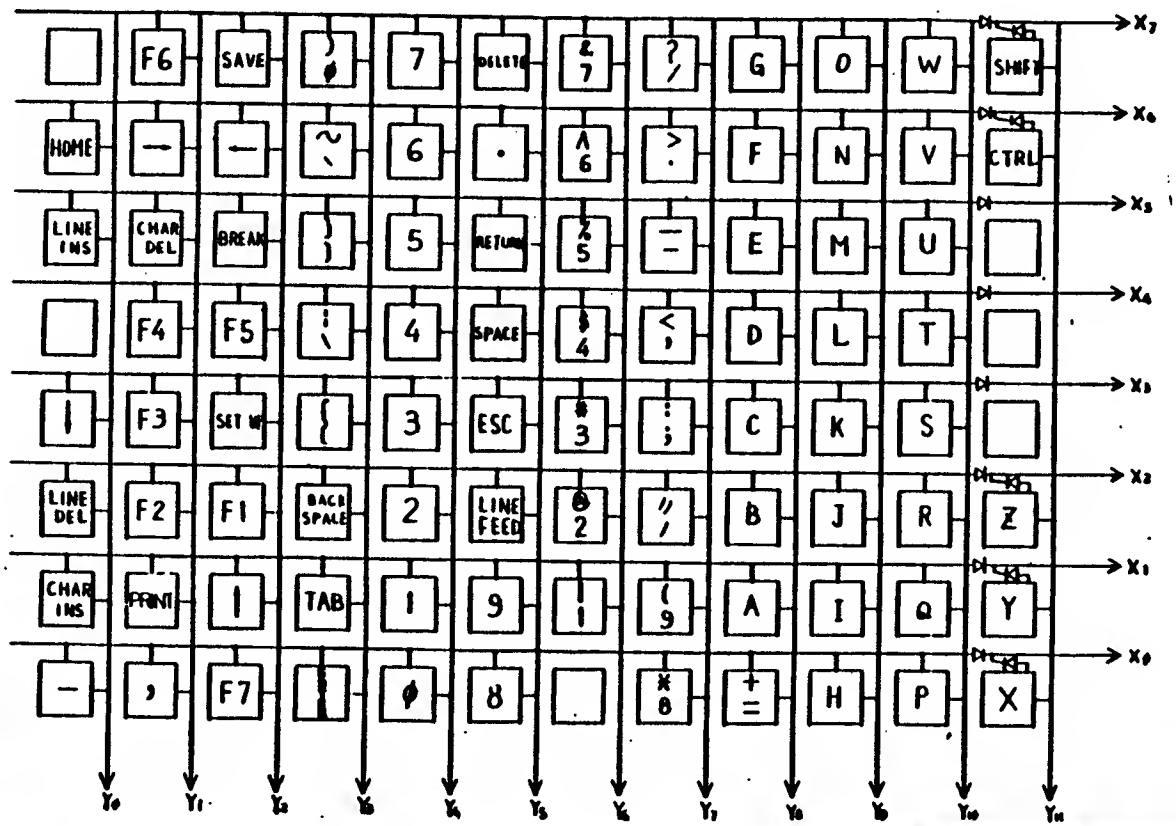

REVISIONS				
ZONE	LTR	DESCRIPTION	DATE	APPROVED
	A	PRODUCTION RELEASE PER DCN # 4093 9-27-82 S. Figueroa		

DASH NO.	NEXT ASSY	USED ON
	7802000F322	DC136240
	APPLICATION	

UNLESS OTHERWISE SPECIFIED
DIM. IN INCHES
TOLERANCES
.X ± .1
.XX ± .03
.XXX ± .010
ANGLES ± 0.5°
MACH. FIN.

CONTR NO.	
DR	S. Figueroa 9-27-82
CHK	[illegible] 9-29-82
DSGN	
ENGR	
PROJ	[illegible]
REL	[illegible]
APPD	
APPD	

LEAR SIEGLER, INC.
ELECTRONIC INSTRUMENTATION DIVISION
ANAHEIM, CALIFORNIA 92803

SCHEMATIC DIAGRAM
ADM 20 KEY MATRIX

SIZE	CODE IDENT NO.	DWG NO.	LTR
B	98438	77242000K13-04	A
SCALE		SHEET	

3,5,6

SECTION VII
PARTS INFORMATION

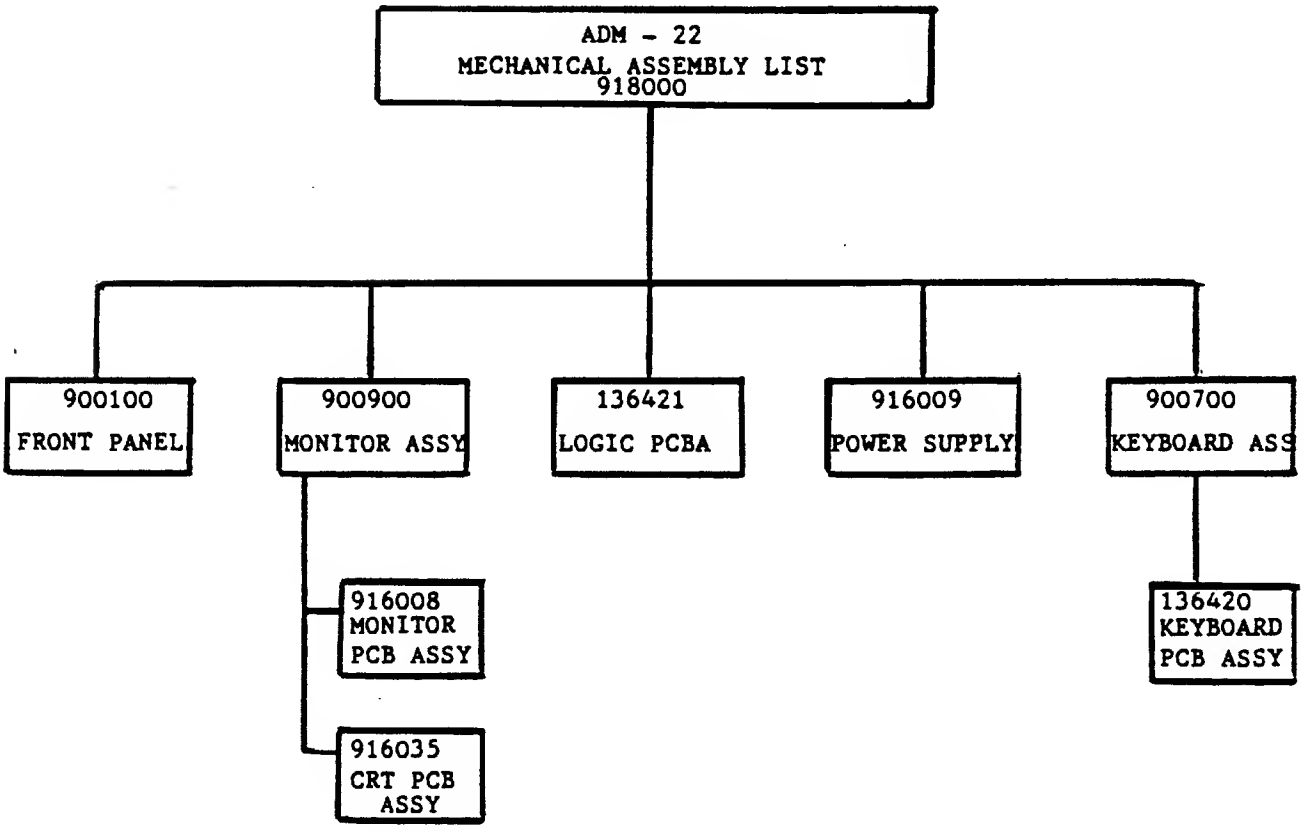

REVISIONS				
LTR	SHEET	DESCRIPTION	DATE	APPROVED

STOCK CODES:

A = ASSY ITEM
N = NON-STOCK (NOT AVAILABLE)
X = FREE STOCK (FLOOR STOCK)

DASH NO.	NEXT ASSY	USED ON

APPLICATION

UNLESS OTHERWISE SPECIFIED DIM. IN INCHES TOLERANCES .X ± .1 .XX ± .03 .XXX ± .010 ANGLES ± 0.5° MACH. FIN. √	DR T. [illegible] 9/24/82	LEAR SIEGLER, INC. DATA PRODUCTS DIV. CUSTOMER SERVICE DEPARTMENT
	CHK	MECHANICAL ASSY ADM 22
	DSGN	
	ENGR	
	PROJ	
	REL	SIZE A · CODE IDENT 98438 · PL 918000 · REV A
	CUSTOMER APPD	SCALE · SHEET 1 OF 3

CUSTOMER SERVICE DEPT.

SIZE A | FSCM NO. 98438 | PL 136421 | SH 2 | REV A

FIND NO.	QTY REQD		.002	.001	STOCK NO.	PART OR IDENTIFYING NO.	NOMENCLATURE OR DESCRIPTION	REMARKS
1				✓	N	918000-001	MECH ASSY 115V WHITE CRT	
2			✓		N	918000-002	MECH ASSY 230V WHITE CRT	
3								
4								
5								
6			1	1	N	900700-001	ASSY KEYBOARD	
7			1	1		900101-001	HOUSING-COVER REAR, STD COLOR	
8			2	2		902532	PLUG, SCREW COVER	
9			2	2	X	922007	SCREW, (COVER MNT) PHL HD	
10			1	1	N	900100-001	ASSY FRONT PANEL W/O MONITOR	
11			1	1	A	900900-001	MONITOR ASSY, WHITE	
12								
13			0	1	A	916009-001	ASSY POWER SUPPLY 115V	
14			1	0	A	916009-002	ASSY POWER SUPPLY 230V	
15			1	1	A	136421-001	ASSY LOGIC BOARD	
16								
17			0	1		916990-1	TRANSFORMER 115VAC	
18			1	0		916990-2	TRANSFORMER 230VAC	
19			0	1		902050-001	POWER CORD 115 VAC	
20			1	0		902050-002	POWER CORD 230 VAC	
21			2	2		902543	BRACKET, TRANSF. MNTG.	
22			1	1	X	922013	WASHER	
23			19	19	X	922010	SCREW	
24			1	1		900104-001	HOUSING-BASE, STD COLOR	
			2	2		902541	FOOT-RUBBER BASE	

CUSTOMER SERVICE DEPT.

SIZE A | FSCM NO. 98438 | SH 3 | PL 136241 | REV A

FIND NO.	QTY REQD		.002	.001	STOCK NO.	PART OR IDENTIFYING NO.	NOMENCLATURE OR DESCRIPTION	REMARKS
26			1	1		136263-001	NAMEPLATE IDENT.	
27			1	1		136417-001	LABEL FCC	
28								
29								
30								
31								
32								
33								
34								
35								
36								
37								
38								
39								
40								
41								
42								
43								
44								
45								
46								
47								
48								
49								
50								

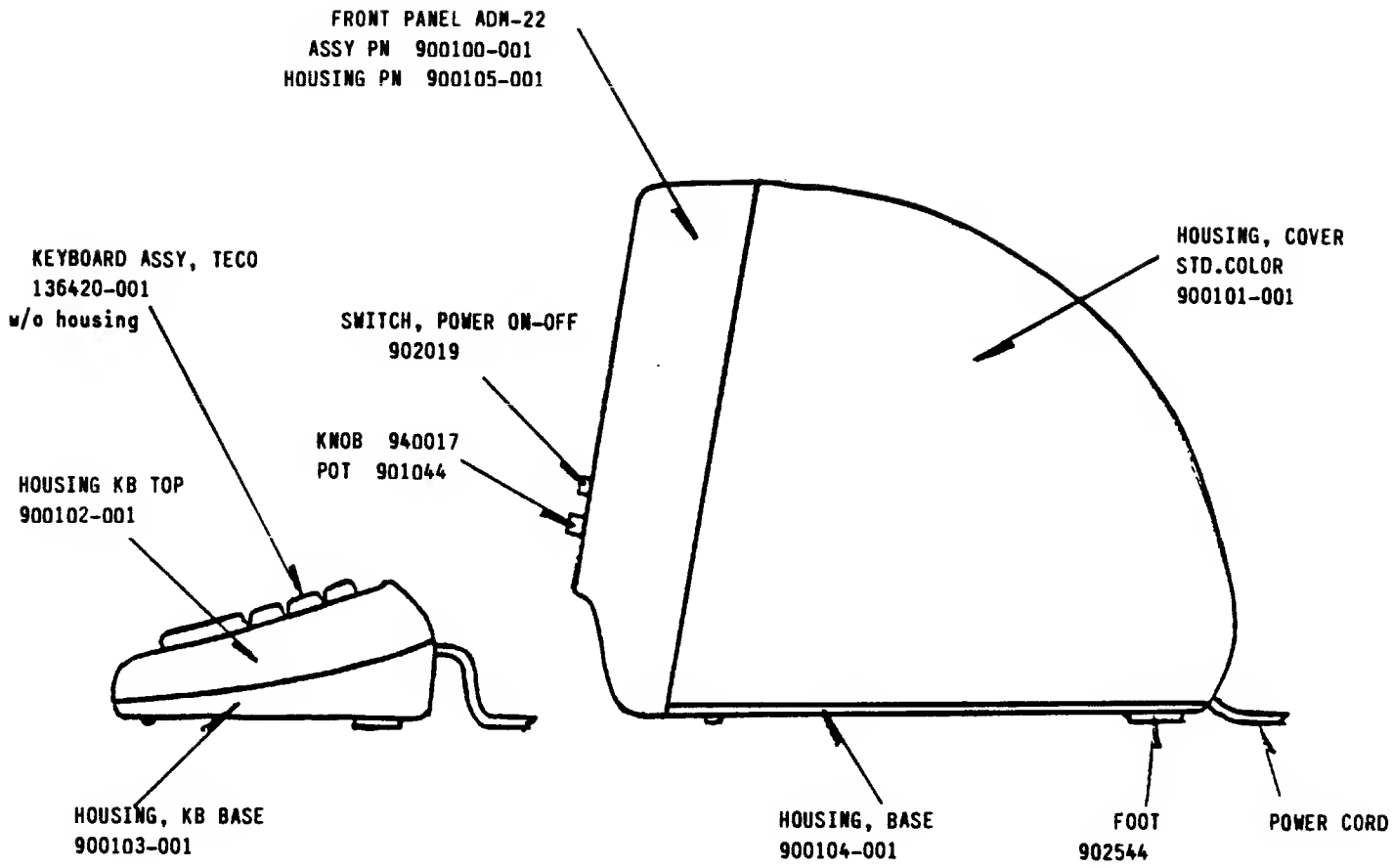
FRONT PANEL ADM-22
ASSY PN 900100-001
HOUSING PN 900105-001
KEYBOARD ASSY, TECO
136420-001
w/o housing
SWITCH, POWER ON-OFF
902019
KNOB 940017
POT 901044
HOUSING KB TOP
900102-001
HOUSING, KB BASE
900103-001
HOUSING, COVER
STD.COLOR
900101-001
HOUSING, BASE
900104-001
FOOT
902544
POWER CORD

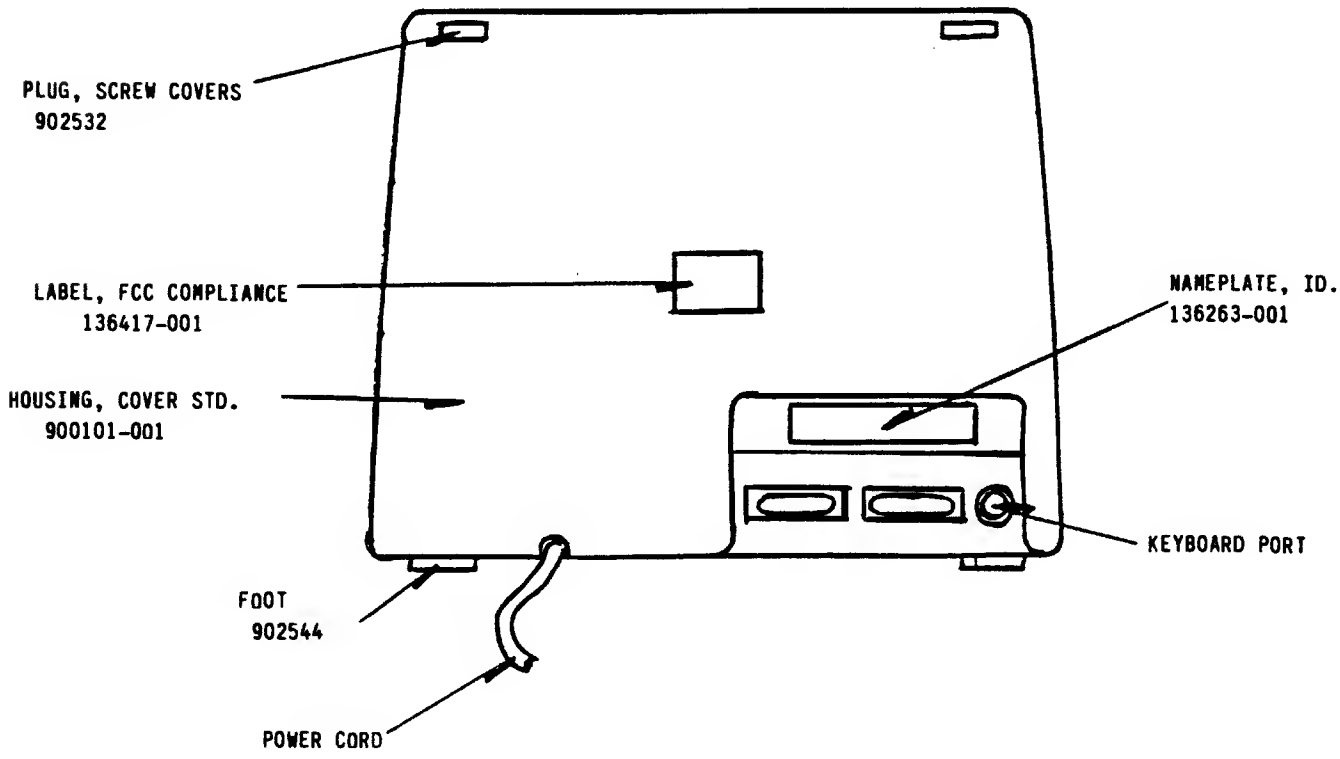
PLUG, SCREW COVERS
902532
LABEL, FCC COMPLIANCE
136417-001
HOUSING, COVER STD.
900101-001
NAMEPLATE, ID.
136263-001
KEYBOARD PORT
FOOT
902544
POWER CORD

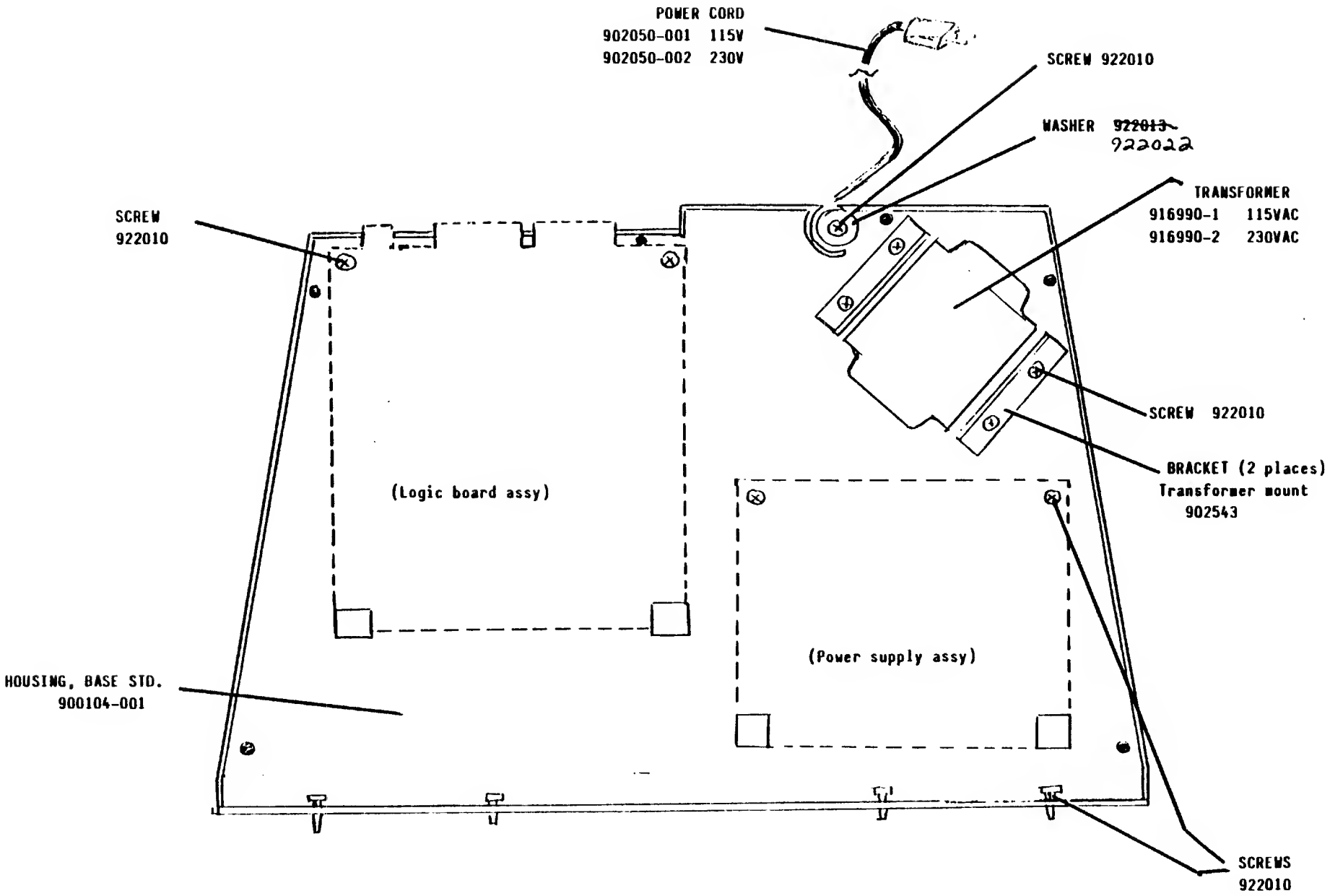
POWER CORD
902050-001 115V
902050-002 230V
SCREW 922010
WASHER ~~922013~~
922022
TRANSFORMER
916990-1 115VAC
916990-2 230VAC
SCREW
922010
SCREW 922010
BRACKET (2 places)
Transformer mount
902543
(Logic board assy)
(Power supply assy)
HOUSING, BASE STD.
900104-001
SCREWS
922010

REVISIONS

LTR	SHEET	DESCRIPTION	DATE	APPROVED

DASH NO.	NEXT ASSY	USED ON

APPLICATION

UNLESS OTHERWISE SPECIFIED
DIM. IN INCHES
TOLERANCES
.X ± .1
.XX ± .03
.XXX ± .010
ANGLES ± 0.5°
MACH. FIN.
√

DR T. Mary 1/24/5
CHK
DSGN
ENGR
PROJ
REL
CUSTOMER APPD

LEAR SIEGLER, INC.
ELECTRONIC INSTRUMENTATION DIV.
ANAHEIM, CALIF.

ASSY FRONT PANEL
W/O MONITOR ADM22

SIZE	CODE IDENT		REV
A	98438	PL 900100	A

SCALE

SHEET 1 OF 2

CUSTOMER SERVICE DEPT.

SIZE A | FSCM NO. 98438 | PL 900100 SH 2 | REV

FIND NO.	QTY REQD -001	STOCK NO.	PART OR IDENTIFYING NO.	NOMENCLATURE OR DESCRIPTION	REMARKS
1	✓		900100-001	ASSY FRONT PANEL W/O MONITOR	
2					
3					
4					
5	1		900105-001	HOUSING, FRONT PANEL, STD	COLOR
6	1		940017	KNOB, BRIGHTNESS	
7	1		902019	SWITCH, POWER ON-OFF	
8	1		901044	RES 100K OHM VAR, BRIGHTNESS	
9	1		902550	BRACKET, SWITCH ASSY	
10	2		902542	BRACKET, TOP HOUSING MNT.	
11	1		902541	WIRE, CRT-GROUND	
12	7	X	922010	SCREW	
13	3	X	922011	SCREW	
14	1	X	922012	SCREW	
15	2	X	821426	SCREW	
16	2	X	822404	NUT	
17	1	X	922013	WASHER	
18	3	X	922014	WASHER	
19	1		136265-001	LABEL, ADM22 LOGO	
20					
21					
22					
23					
24					
25					

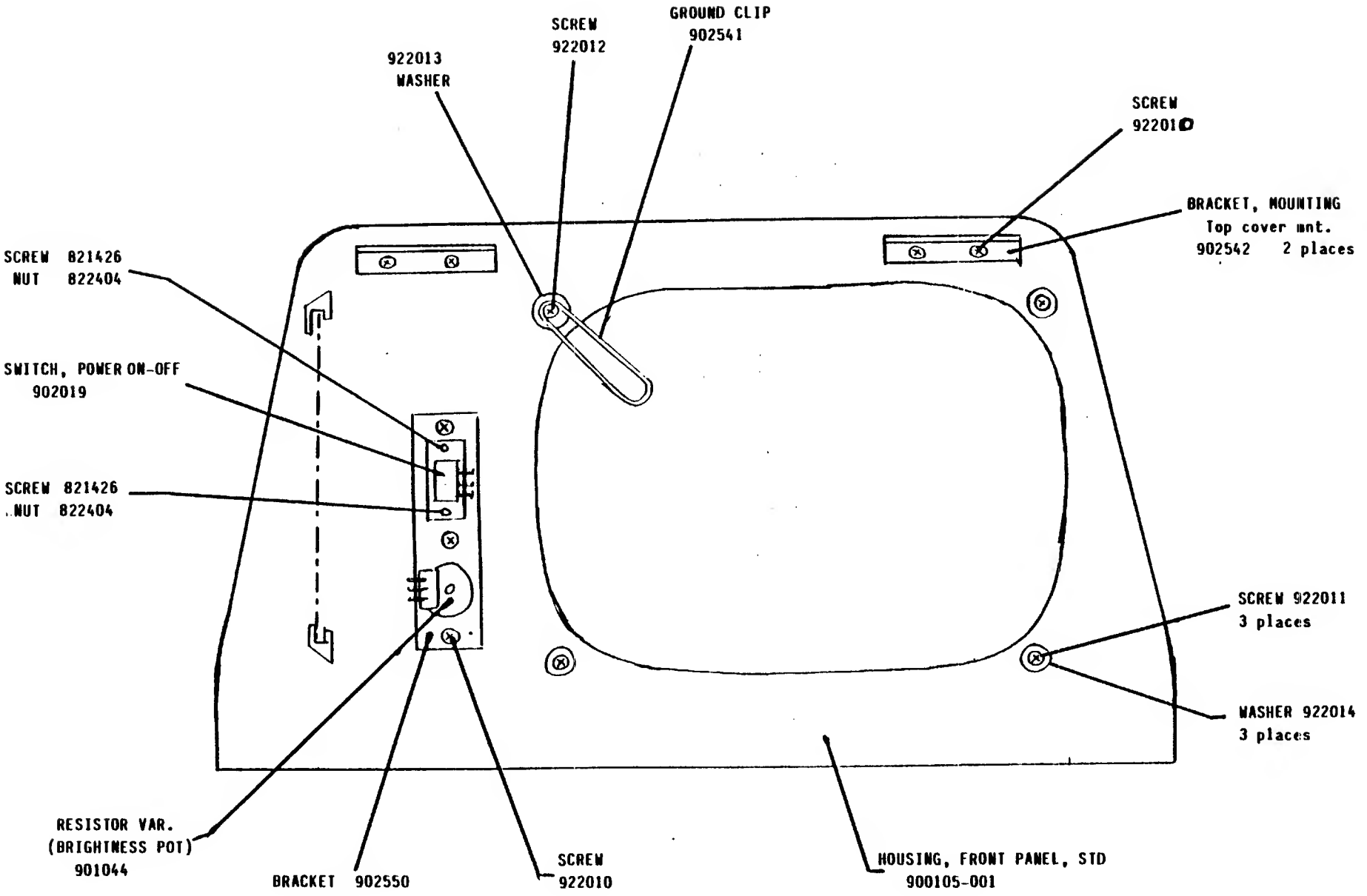
922013
WASHER
SCREW
922012
GROUND CLIP
902541
SCREW
922010
BRACKET, MOUNTING
Top cover mnt.
902542 2 places
SCREW 821426
NUT 822404
SWITCH, POWER ON-OFF
902019
SCREW 821426
NUT 822404
SCREW 922011
3 places
WASHER 922014
3 places
RESISTOR VAR.
(BRIGHTNESS POT)
901044
BRACKET 902550
SCREW
922010
HOUSING, FRONT PANEL, STD
900105-001

REVISIONS

LTR	SHEET	DESCRIPTION	DATE	APPROVED
		TECO - N/A	9-24-82	

DASH NO.	NEXT ASSY	USED ON

APPLICATION

UNLESS OTHERWISE SPECIFIED
DIM. IN INCHES
TOLERANCES
.X ± .1
.XX ± .03
.XXX ± .010
ANGLES ± 0.5°
MACH. FIN.
√

DR T. Mane 9-24-82
CHK
DSGN
ENGR
PROJ
REL
CUSTOMER APPD

LEAR SIEGLER, INC. DATA PRODUCTS DIV.
CUSTOMER SERVICE DEPARTMENT

MONITOR ASSY
ADM22

SIZE A | CODE IDENT 98438 | PL 900900 | REV

SCALE | SHEET 1 OF 2

CUSTOMER SERVICE DEPT.

SIZE A | FSCM NO. 98438 | SH 2 | PL 900900 | REV

FIND NO.	QTY REQD			001	STOCK NO.	PART OR IDENTIFYING NO.	NOMENCLATURE OR DESCRIPTION	REMARKS
1				✓	A	900900-001	MONITOR ASSY - WHITE	
2								
3								
4								
5				1	A	916008-001	ASSY MONITOR CONTROL PCB	
6				1	A	916035-001	ASSY CRT - PCB	
7				1		919022	TUBE, CRT WHITE	
8				1		919017	YOKE ASSY	
9								
10								
11								
12								
13								
14								
15								
16								
17								
18								
19								
20								
21								
22								
23								
24								

REVISIONS				
LTR	SHEET	DESCRIPTION	DATE	APPROVED
		TECO 77242000B29	9-24-82	

	900900	
DASH NO.	NEXT ASSY	USED ON
APPLICATION		

UNLESS OTHERWISE SPECIFIED
DIM. IN INCHES
TOLERANCES
.X ± .1
.XX ± .03
.XXX ± .010
ANGLES ± 0.5°
MACH. FIN.
√

DR T. Maney 9-24-82
CHK
DSGN
ENGR
PROJ
REL
CUSTOMER APPD

LEAR SIEGLER, INC. DATA PRODUCTS DIV.
CUSTOMER SERVICE DEPARTMENT

ASSY, MONITOR CONTROL PCB (MCB) ADM 22

SIZE	CODE IDENT		REV
A	98438	PL 916008	A
SCALE		SHEET 1 OF 5	

FORM 101 REV

CUSTOMER SERVICE DEPT.

SIZE A | FSCM NO 98438 | PL 916002 SH 2 | REV A

FIND NO.	QTY REQD .001	STOCK NO.	PART OR IDENTIFYING NO.	NOMENCLATURE OR DESCRIPTION	REMARKS
1	✓	A	916008-001	PCB ASSY, MONITOR CTRL.	
2					
3					
4	1		916027	FLYBACK TRANSFORMER	T502
5	1		917045	COIL, 550OK FILTER	L501
6	1		917044	COIL, HORIZ. LINE	L502
7	1		917042	COIL, WIDTH	L503
8	1		917043	COIL, HORIZ. LINE ADJ.	L504
9	1		917041	COIL, FOCUS	L505
10	1		916989	TRANSFORMER, HORIZ. DR.	T501
11	1		908036	DIODE 1S2473 SILICON	D401
12	2		908043	DIODE G1B SI RECT.	D402, 403
13	1		908040	DIODE RD16EB3	D501
14	2		908037	DIODE RGP15J SILICON	D502, 505
15	4		908038	DIODE RGP-5040 SILICON	D503, 504, 501, 507
16	1		910531	TRANSISTOR 2SC945R	TR21
17	1		910533	TRANSISTOR D40E5	TR22
18	1		910534	TRANSISTOR B0408	TR23
19	1	*	913510	IC TDA1170	IC401
20	2		901041	RES. 250KOHM VAR.	VR402, 502
21	1		901040	RES 47K OHM VAR.	VR403.
22	1		901042	RES 2M OHM VAR	VR501
23	1		901039	RES 100K OHM VAR	VR401
24	1	X	128533-183	RES 18K OHM 5% 1/4W	R401
	1		903056	RES 130K OHM 5% 1/4W	R402

CUSTOMER SERVICE DEPT.

SIZE A | FSCM NO. 98438 | SH 3 | PL 9/6005 | REV A

FIND NO.	QTY REQD	STOCK NO.	PART OR IDENTIFYING NO.	NOMENCLATURE OR DESCRIPTION	REMARKS
26	2		903055	RES 220K OHM 5% 1/4W	R403, 410
27	2	X	128533-474	RES 470K OHM 5% 1/4W	R404, 406
28	3	*	903033	RES 56K OHM 5% 1/4W	R405, 409, 411
29	1	X	128533-683	RES 68K OHM 5% 1/4W	R407
30	1	X	128533-222	RES 2.2K OHM 5% 1/4W	R414
31	1	X	128533-471	RES 470 OHM 5% 1/4W	R501
32	1	X	128533-102	RES 1K OHM 5% 1/4W	R502
33	1	X	128533-103	RES 10K OHM 5% 1/4W	R503
34	1		903519	RES 10 OHM 5% 1/4W	R408
35	1		903571	RES 3.3 OHM 5% 1/2W	R412
36	1		129471-680	RES 68 OHM 5% 1/2W	R505
37	3		129471-104	RES 100K OHM 5% 1/2W	R506, 511, 512
38	1		903503	RES 82K OHM 5% 1/2W	R507
39	1		903540	RES 12K OHM 5% 1/2W	R508
40	2		903577	RES 10M OHM 5% 1/2W	R509, R510
41	1		903572	RES 56K OHM 5% 1/2W	R514
42	1		903576	RES 330K OHM 5% 1/2W	R515
43	1		903851	RES 47 OHM 5% 5W	R504
44	1		905021	CAP 330 MFD 50V	C401
45	1		128518-101	CAP 100 PFD, 500V	C515
46	1		905375	CAP 10 MFD 16V	C405
47	1		132619-228	CAP 2200 MFD 10V	C408
48	1		132617-108	CAP 1000 MFD 25V	C409
49	1		132617-107	CAP 100 MFD 25V	C410
50	1		132618-105	CAP 1 MFD 50V	C502

CUSTOMER SERVICE DEPT.

SIZE A | FSCM NO. 98438 | PL 916005 SH 4 | REV A

FIND NO.	QTY REQD -001	STOCK NO.	PART OR IDENTIFYING NO.	NOMENCLATURE OR DESCRIPTION	REMARKS
51	1		905377	CAP 18 MFD 25V	C505
52	1		905302	CAP 220 MFD 25V	C506
53	1		905374	CAP 100 MFD 25V	C508
54	1		905373	CAP 47 MFD 63V	C514
55	1		905444	CAP .0022 MFD 50V	C401
56	3		905442	CAP .15 MFD 50V	C402,403,404
57	1		905441	CAP .1 MFD 50V	C407
58	1		905443	CAP .047 MFD 50V	C501
59	1		905445	CAP .022 MFD 50V	C503
60	1		905418	CAP .22 MFD 630V	C510
61	1		905440	CAP .022 MFD 630V	C509
62	1		905721	CAP .01 MFD 1KV	C511
63	1		905720	CAP .039 MFD 400V	C504
64	1		905717	CAP .022 MFD 400V	C507
65	1	X	902069	WIRE GND	
66	1	N	902537	HEATSINK	IC401
67	1	N	902529	SHIELD, CASE (Plate)	IC401
68	1	N	902058	WIRE ASSY 6-PIN CONN	S
69	//	X	902048	PIN 1 2.35D 1PIN	
70					
71					
72					
73					
74	1	N	902538	HEATSINK	TR23
75	1		834001	INSULATOR	TR23

CUSTOMER SERVICE DEPT.

SIZE A | FSCM NO. 98438 | SH 5 | PL 9/6008 | REV A

FIND NO	QTY REQD	STOCK NO.	PART OR IDENTIFYING NO.	NOMENCLATURE OR DESCRIPTION	REMARKS
76	1	N	902540	BUSHING	TR23
77	1	X	821426	SCREW 4-40 x .375 SLT-HD	TR23
78	1	X	822404	NUT 4-40 HEX	TR23
79					
80					
81					
82					
83					
84					
85					
86					
87					
88					
89					
90					
91					
92					
93					
94					
95					
96					
97					
98					
99					
100					

REVISIONS

LTR	SHEET	DESCRIPTION	DATE	APPROVED
		TECO 7724200OC26	9-24-82	

	900900	
DASH NO.	NEXT ASSY	USED ON
APPLICATION		

UNLESS OTHERWISE SPECIFIED
DIM. IN INCHES
TOLERANCES
.X ± .1
.XX ± .03
.XXX ± .010
ANGLES ± 0.5°
MACH. FIN.
√

DR T. Mana 9-24-82
CHK
DSGN
ENGR
PROJ
REL
CUSTOMER APPD

LEAR SIEGLER, INC. DATA PRODUCTS DIV.
CUSTOMER SERVICE DEPARTMENT

PCB ASSY, CRT ADM 22

SIZE	CODE IDENT		REV
A	98438	PL 916035	A
SCALE		SHEET 1 OF 3	

CUSTOMER SERVICE DEPT.

SIZE A | FSCM NO 98438 | SH 2 | PL 916035 | REV

FIND NO.	QTY REQD -001	STOCK NO.	PART OR IDENTIFYING NO.	NOMENCLATURE OR DESCRIPTION	REMARKS
1	✓	A	916035-001	CRT, PCB ASSY	
2					
3					
4					
5	1	N	902046	SOCKET, CRT	SCK-1
6	1		908039	DIODE RD6R8E-B ZENER	D204
7	1		908036	DIODE 1S2473 SILICON	D205
8	1		908043	DIODE G1B SI RECT.	D206
9	1		810001	TRANSISTOR 2N3904	TR19
10	1		910532	TRANSISTOR 2SC1921	TR20
11	4		905901	SPARK-GAP 122F-L3N	SG1,2,3,4
12	1	N	902048	PIN 1 2.35D 1PIN	(x)
13	1	N	902047	HEADER 3PIN 1.57D 3P	
14	1		905037	CAP 120 PFD 100V	C203
15	1		805058	CAP 82 PFD 50V	C205
16	1		132618-105	CAP 1 UF 50V	C204
17	1		905446	CAP .1 MFD 250V	C206
18	2		905440	CAP .022 MFD 400V	C512,513
19	1	X	128533-101	RES 100 OHM 5% 1/4W	R208
20	1	X	128533-560	RES 56 OHM 5% 1/4W	R209
21	1	X	128533-222	RES 2.2K OHM 5% 1/4W	R213
22	1		903506	RES 8.2K OHM 5% 1/2W	R210
23	1		903504	RES 820 OHM 5% 1/2W	R211
24	1		903501	RES 220 OHM 5% 1/2W	R212
25	1		903478	RES 340 OHM 5% 1/2W	R214

CUSTOMER SERVICE DEPT.

SIZE A | FSCM NO. 98438 | PL SH 3 | 9/6035 | REV

FIND NO.	QTY REQD -001	STOCK NO.	PART OR IDENTIFYING NO.	NOMENCLATURE OR DESCRIPTION	REMARKS
26	1		903550	RES 39 OHM 5% 1/2W	R513
27	1		129471-104	RES 100K OHM 5% 1/2W	R516
28	1	N	NPN	JUMPER WIRE WD1-7.5	L202
29	1	N	↓	JUMPER WIRE WD1-12.5	J22
30	1	N		WIRE WHITE 500-10/10	G1
31	1	N		WIRE BROWN 410-10/10	HB
32	1	N		WIRE YELLOW 450-10/10	B
33	1	N		WIRE BLACK 410-10/10	E3
34	1	N		WIRE BLUE 460-10/10	G2
35	1	N		WIRE ORANGE 470-10/10	G4
36					
37					
38					
39					
40					
41					
42					
43					
44					
45					
46					
47					
48					
49					
50					

REVISIONS				
LTR	SHEET	DESCRIPTION	DATE	APPROVED
		TECO		

DASH NO.	NEXT ASSY	USED ON
APPLICATION		

UNLESS OTHERWISE SPECIFIED
DIM. IN INCHES
TOLERANCES
.X ± .1
.XX ± .03
.XXX ± .010
ANGLES ± 0.5°
MACH. FIN.
√

DR
CHK
DSGN
ENGR
PROJ
REL
CUSTOMER APPD

LEAR SIEGLER, INC. DATA PRODUCTS DIV.
CUSTOMER SERVICE DEPARTMENT

ASSY LOGIC BOARD
108.00 ADM 22

SIZE	CODE IDENT		REV
A	98438	PL 136421	A

SCALE | SHEET 1 OF

CUSTOMER SERVICE DEPT.

SIZE A | FSCM NO. 98438 | 136421 | SH 2 | REV

FIND NO.	QTY REQD -001	STOCK NO.	PART OR IDENTIFYING NO.	NOMENCLATURE OR DESCRIPTION	REMARKS
1	✓		136421-001	ASSY LOGIC BOARD (TECO)	
2					
3					
4					
5	1		902044	AUDIO INDICATOR	
6	1		902045	SOCKET D1	
7	2		802033	SOCKET 24 PIN LP	IC 44, 23
8	2		802034	SOCKET 40 PIN LP	IC 26, 31
9	1		905801	CRYSTAL 6.144MHZ	XT1
10	1		905802	CRYSTAL 16.588MHZ	XT2
11	1		910531	TRANSISTOR 2SC945	Q1
12	1		908044	DIODE RD12FBD ZENER	D1
13	1		908041	DIODE RD5RIEB ZENER	D10
14	9		908035	DIODE 1N4446 SILICON	D2 THRU D9, D11
15	2		128348-1488	IC 1488	A1, 3
16	1		128348-1489	IC 1489	A2
17	2		913104	IC H11A1	A4, 5
18	2		129467-125	IC 74LS125	A6, 18
19	1		913105	IC XD2210	A8
20	1		913096	IC 74LS93	A9
21	2		129467-74	IC 74LS74	A10, 35
22	1		913102	IC TECO-01	A11
23	3		913098	IC 8251	A12, 13, 14
24	1		913097	IC 74LS166	A15
25	1		129467-86	IC 74LS86	A16

CUSTOMER SERVICE DEPT.

SIZE A | FSCM NO. 98438 | SH 3 | 129421 | REV

FIND NO.	QTY REQD -001	STOCK NO.	PART OR IDENTIFYING NO.	NOMENCLATURE OR DESCRIPTION	REMARKS
26	3		129467-04	IC 74LS04	A17, 34, 47
27	2		129467-245	IC 74LS245	A19, 20
28	2		913094	IC 6116	A21, 45
29	4		913106	IC 74LS377	A22, 27, 32, 33
30					
31	1		129467-11	IC 74LS11	A24
32	1		129467-163	IC 74LS163	A25
33	1		913101	IC 8085	A26
34	1		129467-244	IC 74LS244	A28
35	3		129467-157	IC 74LS157	A29, 30, 43
36	1		913100	IC HD46505SP	A31
37	2		129467-08	IC 74LS08N	A36, 40
38	2		129467-32	IC 74LS32	A37, 39
39	1		129467-00	IC 74LS00	A38
40	1		129467-139	IC 74LS139	A41
41	1		129467-138	IC 74LS138	A42
42	1	4	129467-123	IC 74LS123	A46
43	4		903006	RES 1K OHM NETWORK	RA1, 2, 3, 4
44	1	N	902069	WIRE ASSY ASSLUG GND	ET
45	1	X	128533-470	RES 47 OHM 5% 1/4W	R1
46	1	X	128533-332	RES 3.3K OHM 5% 1/4W	R2
47	5	X	128533-103	RES 10K OHM 5% 1/4W	R3,4,56 R23
48	1	X	128533-221	RES 220 OHM 5% 1/4W	R8
49	1	X	128533-271	RES 270 OHM 5% 1/4W	R9
50	1	X	128533-391	RES 390 OHM 5% 1/4W	R11

CUSTOMER SERVICE DEPT.

SIZE A | FSCM NO. 98438 | SH 2 | 136421 | REV

FIND NO.	QTY REQD	STOCK NO.	PART OR IDENTIFYING NO.	NOMENCLATURE OR DESCRIPTION	REMARKS
51	2	X	128533-152	RES 1.5K OHM 5% 1/4W	R10, 20
52	1	X	128533-101	RES 100 OHM 5% 1/4W	R12
53	1	X	128533-821	RES 820 OHM 5% 1/4W	R13
54	2	X	128533-102	RES 1K OHM 5% 1/4W	R18, 19
55	1	X	128533-100	RES 10 OHM 5% 1/4W	R22
56	4	X	128533-471	RES 470 OHM 5% 1/4W	R24, 25, 26, 29
57	2		903055	RES 220K OHM 5% 1/4W	R27, 28
58	34		905016	CAP .01 MFD 100V CER	C1 THRU C20
59					C22, 23, 24, 25, 28
60					C29 THRU C34
61					C36, 44, 46
62	1		128518-561	CAP. 560 PFD 1KV CER.	C45
63	4		905345	CAP. 22 MFD 25V	C21, 37, 38, 43
64	1		905370	CAP. 100 MFD 16V	C27
65	1		132618-105	CAP. 1 UF 50V	C35
66	10		902048	PIN I 2.35D 1PIN	
67	2		902075	CONNECTOR ASSY AMP 166262-1 25 PIN	DC1, DC2
68	1		903512	RES 100 OHM 5% 1/2W	R7
69	1		913095-001	EPROM ADIII-22 2732A	A23
70	1		913095-002	EPROM ADM-22 2732A	A44
71					
72					
73					
74					

REVISIONS

LTR	SHEET	DESCRIPTION	DATE	APPROVED
		TECO 77242000A21	9-24-82	

DASH NO.	NEXT ASSY	USED ON

APPLICATION

UNLESS OTHERWISE SPECIFIED
DIM. IN INCHES
TOLERANCES
.X ± .1
.XX ± .03
.XXX ± .010
ANGLES ± 0.5°
MACH. FIN. √

DR	T. Mane, 9-24-82
CHK	✓
DSGN	
ENGR	
PROJ	
REL	
CUSTOMER APPD	

LEAR SIEGLER, INC. DATA PRODUCTS DIV.
CUSTOMER SERVICE DEPARTMENT

POWER SUPPLY
ADM 22

SIZE	CODE IDENT		REV
A	98438	PL 916009	A

SCALE | SHEET 1 OF 2

FORM 10 101H

CUSTOMER SERVICE DEPT.

X

SIZE A | FSCM NO. 98438 | PL 916009 SH 2 | REV A

FIND NO.	QTY REQD		.002	.001	STOCK NO.	PART OR IDENTIFYING NO.	NOMENCLATURE OR DESCRIPTION	REMARKS
1				✓	A	916009-001	POWER SUPPLY, ASSY	
2			✓		A	916009-002	POWER SUPPLY, ASSY	
3								
4								
5			1	0		840026	FUSE .75 AMP SLO BLO	F1
6			6	6		840007	CLIP FUSE RETAINER	
7			13	13		902048	PINS 2.350	
8			1	1	N	902057	CONNECTOR 4 PIN	
9			0	1		840028	FUSE, 1.25 AMP SLO BLO	F1
10			2	2		840010	FUSE, 2AMP 250V 6.35DX30	TR601, 602
11			4	4	X	821424	SCREW, 4-40X.500 SLT-HD	TR601, 602
12			4	4	X	822404	NUT #4 4-40 HEX	TR601, 602
13			2	2		839024	INSULATOR	TR601, 602
14			4	4		908042	DIODE, IN5401	D601, 602, 603, 604
15			2	2		908043	DIODE GIB SI. RECT.	D605, 606
16			1	1		908041	DIODE RD5RIEB ZENER	ZD601
17			1	1		908025	DIODE C122A	SCR1
18			2	2		910535	TRANSISTOR MJ2955	TR601, 602
19			1	1		128348-7805	IC LM7805	IC1
20			1	1		128348-7815	IC 7815	IC2
21			1	1		128348-7912	IC 7912	IC3
22			2	2		905378	CAP. 4700 MFD 25V	C601, 602
23			2	2		905376	CAP .47 MFD 50V	C604, 609
24			1	1		905346	CAP 470 MFD 16V	C605
25			1	1		905379	CAP 4700 MFD 35V	C607

CUSTOMER SERVICE DEPT.

SIZE A | FSCM NO. 98438 | PL 916009 SH 3 | REV A

FIND NO.	QTY REQD		.002	.001	STOCK NO.	PART OR IDENTIFYING NO.	NOMENCLATURE OR DESCRIPTION	REMARKS
26			1	1		905372	CAP 330 MFD 25V	C610
27			1	1		905341	CAP 100 MFD 35V	C612
28			1	1		905371	CAP 220 MFD 16V	C612
29			6	6		905033	CAP 472 PFD 50V	C603, 606, 608, 611, 613, 615
30			1	1		905050	CAP 470 PFD 1KV	C616
31			1	1	X	128533-680	RES 68 OHM 5% 1/4W	R601
32			2	2	X	128533-470	RES 47 OHM 5% 1/4W	R602, 604
33			1	1	X	128533-102	RES 1K OHM 5% 1/4W	R606
34			1	1		903057	RES 4.7 MEG OHM 5% 1/4W	R607
35			4	4		902540	BUSHING	TR601, 602
36			1	1	N	902069	WIRE ASSY, LVG/GND	
37			1	1	N	902539	HEATSINK	
38			4	4	X	823410	WASHER #4 SPLIT	
39								
40								
41								
42								
43								
44								
45								
46								
47								
48								
49								
50								

REVISIONS				
LTR	SHEET	DESCRIPTION	DATE	APPROVED

	136241	
DASH NO.	NEXT ASSY	USED ON
APPLICATION		

UNLESS OTHERWISE SPECIFIED
DIM. IN INCHES
TOLERANCES
.X ± .1
.XX ± .03
.XXX ± .010
ANGLES ± 0.5°
MACH. FIN.
√

DR T. Mane
CHK
DSGN
ENGR
PROJ
REL
CUSTOMER APPD

LEAR SIEGLER, INC. DATA PRODUCTS DIV.
CUSTOMER SERVICE DEPARTMENT

KEYBOARD ASSY
ADM22

SIZE	CODE IDENT		REV
A	98438	PL 900700	
SCALE		SHEET 1 OF	

CUSTOMER SERVICE DEPT.

SIZE A | FSCM NO. 98438 | SH | REV

FIND NO.	QTY REQD			-001	STOCK NO.	PART OR IDENTIFYING NO.	NOMENCLATURE OR DESCRIPTION	REMARKS
1				✓	N	900700-001	KEYBOARD ASSY	
2								
3								
4								
5				1		900102-001	HOUSING, KB, TOP ADM22	
6				1		900103-001	HOUSING, KB, BASE ADM22	
7				1	A	136420-001	ASSY KEYBOARD-TECO 22	
8				1		902551	BRACKET, CABLE MOUNT	
9				1		136266-001	NAMEPLATE KB (LOGO)	
10				6		922010	SCREW M4X12 SZNB	
11				6		922020	SCREW M3X8 SZNB	
12				2		902544	FOOT KEYBOARD	
13								
14								
15								
16								
17								
18								
19								
20								
21								
22								
23								
24								

REVISIONS

LTR	SHEET	DESCRIPTION	DATE	APPROVED

DASH NO.	NEXT ASSY	USED ON
APPLICATION		

UNLESS OTHERWISE SPECIFIED
DIM. IN INCHES
TOLERANCES
.X ± .1
.XX ± .03
.XXX ± .010
ANGLES ± 0.5°
MACH. FIN.
√

DR	
CHK	
DSGN	
ENGR	
PROJ	
REL	
CUSTOMER APPD	

LEAR SIEGLER, INC. DATA PRODUCTS DIV.
CUSTOMER SERVICE DEPARTMENT

KEYBOARD - TECO
ADM22

SIZE	CODE IDENT		REV
A	98438	PL 136420	A
SCALE		SHEET 1 OF	

CUSTOMER SERVICE DEPT.

SIZE A | FSCM NO. 98438 | PL 1364420 SH 3 | REV A

FIND NO.	QTY REQD	STOCK NO.	PART OR IDENTIFYING NO.	NOMENCLATURE OR DESCRIPTION	REMARKS
26	1	X	128533-105	RES 1M OHM 5% 1/4W	R2
27	2		903007	RES 10K OHM RES-NETWORK	RA1, 2
28	1	X	821407	SCREW 4-40 x .250 PHIL HD M3X6 SZ NW	
29	1	X	822405	NUT 4-40 #4 HEX 2M3SW	
30	1	N	NPN	JUMPER WIRE 10X12.5X10	J7,6
31	1	N	NPN	JUMPER WIRE 7X12.5X7	S1-75
32	1		910531	TRANSISTOR 2SC945	Q1
33					
34					
35					
36					
37					
38					
39					
40					
41					
42					
43					
44					
45					
46					
47					
48					
49					

CUSTOMER SERVICE DEPT.

SIZE A | FSCM NO. 98438 | PL 136420 SH 2 | REV A

FIND NO.	QTY REQD -001	STOCK NO.	PART OR IDENTIFYING NO.	NOMENCLATURE OR DESCRIPTION	REMARKS
1	✓	A	136420-001	ASSY KEYBOARD ADM-22 TECO	
2					
3					
4					
5	REF			KEYTOPS BLANK-TECO	(PART LIST)
6	REF			KEYTOPS STANDARD ADM22	(PART LIST)
7	1	N	904050	KEYTOP SET, STD ADM22	
8					
9	1		902060	CABLE KB ADM22	
10	91		904051	KEYSWITCH TECO STD	
11	1		904053	KEYSWITCH CAP-LOCK TECO	
12	2		904054	KEY SUPPORT	
13	1		904056	SPACE BAR, KEY TOP	
14	1		904057	SPACE BAR ROD	
15	2		904058	SPACE BAR SUPPORT	
16	14		908035	DIODE IN4446	D1 THRU D14
17	1		913103	IC MM57499N	IC1
18	1		905803	CRYSTAL 3579545HZ	XT1
19	1		905345	CAP. 22 MFD 25V	C1
20	1		905380	CAP 2.2 MFD 50V	C3
21	1		905051	CAP 27 PFD 100V	C2
22	1		129329-104	CAP .1 MFD 100V	C4
23	1		128533-101	RES 100 OHM 5% 1/4W	R4
24	1	X	128533-102	RES 1K OHM 5% 1/4W	R1
--	2	X	128533-103	RES 10K OHM 5% 1/4W	R3, 5

APPENDIX A
OPERATORS
QUICK REFERENCE
CHARTS

ASCII CODE CHART

BITS B7 B6 B5 / B4 B3 B2 B1	0 0 0	0 0 1	0 1 0	0 1 1	1 0 0	1 0 1	1 1 0	1 1 1
	CONTROL		NUMBERS SYMBOLS		UPPER CASE		LOWER CASE	
0 0 0 0	0 NUL 0 0	20 DLE 10 16	40 SP 20 32	60 0 30 48	100 @ 40 64	120 P 50 80	140 ` 60 96	160 p 70 112
0 0 0 1	1 SOH 1 1	21 DC1 11 17	41 ! 21 33	61 1 31 49	101 A 41 65	121 Q 51 81	141 a 61 97	161 q 71 113
0 0 1 0	2 STX 2 2	22 DC2 12 18	42 " 22 34	62 2 32 50	102 B 42 66	122 R 52 82	142 b 62 98	162 r 72 114
0 0 1 1	3 ETX 3 3	23 DC3 13 19	43 # 23 35	63 3 33 51	103 C 43 67	123 S 53 83	143 c 63 99	163 s 73 115
0 1 0 0	4 EOT 4 4	24 DC4 14 20	44 $ 24 36	64 4 34 52	104 D 44 68	124 T 54 84	144 d 64 100	164 t 74 116
0 1 0 1	5 ENQ 5 5	25 NAK 15 21	45 % 25 37	65 5 35 53	105 E 45 69	125 U 55 85	145 e 65 101	165 u 75 117
0 1 1 0	6 ACK 6 6	26 SYN 16 22	46 & 26 38	66 6 36 54	106 F 46 70	126 V 56 86	146 f 66 102	166 v 76 118
0 1 1 1	7 BEL 7 7	27 ETB 17 23	47 ' 27 39	67 7 37 55	107 G 47 71	127 W 57 87	147 g 67 103	167 w 77 119
1 0 0 0	10 ← BS 8 8	30 CAN 18 24	50 (28 40	70 8 38 56	110 H 48 72	130 X 58 88	150 h 68 104	170 x 78 120
1 0 0 1	11 TAB HT 9 9	31 EM 19 25	51) 29 41	71 9 39 57	111 I 49 73	131 Y 59 89	151 i 69 105	171 y 79 121
1 0 1 0	12 ↓ LF A 10	32 SUB 1A 26	52 * 2A 42	72 : 3A 58	112 J 4A 74	132 Z 5A 90	152 j 6A 106	172 z 7A 122
1 0 1 1	13 ↑ VT B 11	33 ESC 1B 27	53 + 2B 43	73 ; 3B 59	113 K 4B 75	133 [5B 91	153 k 6B 107	173 { 7B 123
1 1 0 0	14 → FF C 12	34 FS 1C 28	54 , 2C 44	74 < 3C 60	114 L 4C 76	134 \ 5C 92	154 l 6C 108	174 ¦ 7C 124
1 1 0 1	15 RTN CR D 13	35 GS 1D 29	55 - 2D 45	75 = 3D 61	115 M 4D 77	135] 5D 93	155 m 6D 109	175 } 7D 125
1 1 1 0	16 SO E 14	36 HOME RS 1E 30	56 . 2E 46	76 > 3E 62	116 N 4E 78	136 ^ 5E 94	156 n 6E 110	176 ~ 7E 126
1 1 1 1	17 SI F 15	37 NEW LINE US 1F 31	57 / 2F 47	77 UNL ? 3F 63	117 O 4F 79	137 _ 5F 95	157 o 6F 111	177 DEL RUBOUT 7F 127

KEY

Get familiar with ASCII and LSI control codes with the help of this handy table.

ABSOLUTE CURSOR ADDRESSING OPERATION CODES

Keys Used: ESC = ROW ASCII COL ASCII

ASCII CODES	POSITION ROW	POSITION COL	ASCII CODES	POSITION ROW	POSITION COL	ASCII CODES	POSITION ROW	POSITION COL
ESC = SPACE	1	1	ESC = ;		28	ESC = V		55
!	2	2	<		29	W		56
"	3	3	=		30	X		57
#	4	4	>		31	Y		58
$	5	5	?		32	Z		59
%	6	6	@		33	[		60
&	7	7	A		34	\		61
'	8	8	B		35	]		62
(	9	9	C		36	^		63
)	10	10	D		37	_		64
*	11	11	E		38	`		65
+	12	12	F		39	a		66
,	13	13	G		40	b		67
-	14	14	H		41	c		68
.	15	15	I		42	d		69
/	16	16	J		43	e		70
0	17	17	K		44	f		71
1	18	18	L		45	g		72
2	19	19	M		46	h		73
3	20	20	N		47	i		74
4	21	21	O		48	j		75
5	22	22	P		49	k		76
6	23	23	Q		50	l		77
7	24	24	R		51	m		78
8		25	S		52	n		79
9		26	T		53	ESC = o		80
ESC = :		27	ESC = U		54			

STATUS LINE CODE SUMMARY

Write Status Line	ESC % $X^1X^2X^3....X^{10}$
Read Status Line	ESC $
Response	$X^1X^2X^3....X^{10}$ CR

Where X_1 thru X_{10} correspond to nybbles 1 thru 10. The lower four bits of each character represents the set (1) or reset (0) state of the associated nybble. The control codes used are depicted below with the various bit state combinations.

Must Be Low BIT 6 5 4 3 2 1 0	ASCII CHARACTER
0 0 0 0 0 0 0	NUL - 00 Hex
0 0 0 0 0 0 1	SOH - 01 Hex
0 0 0 0 0 1 0	STX - 02 Hex
0 0 0 0 0 1 1	ETX - 03 Hex
0 0 0 0 1 0 0	EOT - 04 Hex
0 0 0 0 1 0 1	ENQ - 05 Hex
0 0 0 0 1 1 0	ACK - 06 Hex
0 0 0 0 1 1 1	BEL - 07 Hex
0 0 0 1 0 0 0	BS - 08 Hex
0 0 0 1 0 0 1	HT - 09 Hex
0 0 0 1 0 1 0	LF - 0A Hex
0 0 0 1 0 1 1	VT - 0B Hex
0 0 0 1 1 0 0	FF - 0C Hex
0 0 0 1 1 0 1	CR - 0D Hex
0 0 0 1 1 1 0	SO - 0E Hex
0 0 0 1 1 1 1	SI - 0F Hex

ADM 22 ESCAPE SEQUENCES

HEX	2		3		4		5		6		7	
0			0		@	PRINT PAGE UNPROTECTED	P	PRINT PAGE ALL	`		p	
1	!		1		A	COPY PRINT WITH DISPLAY	Q	INSERT CHAR	a		q	
2	"	KEYBOARD UNLOCK	2		B	SET BLOCK MODE	R	DELETE LINE	b		r	
3	#	KEYBOARD LOCK*	3		C	SET CONV MODE	S		c		s	
4	$	READ STATUS LINE*	4	SEND LINE UNPROTECTED	D	SET H/F DUPLEX	T	ERASE TO END OF LINE UNPROTECTED	d		t	ERASE TO END OF LINE ALL
5	%	WRITE STATUS LINE*	5	SEND PAGE UNPROTECTED	E	INSERT LINE	U	SET PROGRAM MODE	e		u	
6	&	SET PROTECT MODE	6	SEND LINE ALL	F		V		f		v	
7	'	RESET PROTECT MODE	7	SEND PAGE ALL	G	SET GRAPHICS MODE	W	DELETE CHAR	g		w	
8	(	RESET WRITE PROTECT	8		H	RESET GRAPHICS MODE	X	RESET PROGRAM MODE	h		x	SEND CHARACTER AT CURSOR
9	)	SET WRITE PROTECT	9		I	BACK TAB	Y	ERASE TO END OF PAGE UNPROTECTED	i	TAB	y	ERASE TO END OF PAGE ALL
A	*	CLEAR ALL TO NULL	:	CLEAR ALL TO NULL	J		Z		j		z	
B	+	CLEAR UNPROTECT TO SPACES	;	CLEAR UNPROTECT TO SPACES	K		[		k		{	
C	,		<	ERASE LINE UNPROTECTED	L		\		l		|	
D	-		=	ADDRESS CURSOR RC**	M	SET MONITOR MODE	]		m		}	
E	.		>	ERASE LINE ALL	N		^		n	AUXILIARY PORT WITHOUT DISPLAY	~	
F	/		?	READ CURSOR RC**	O		_		o	RESET TERMINAL	DEL	

*MULTIPLE CHARACTERS REQUIRED. SEE TABLE 3-3.
**MULTIPLE CHARACTERS REQUIRED. SEE FIGURE 3-2.

APPENDIX B

EMULATION COMMAND CODE SUMMARY
(Operations are as described in Table 3-2 and 3-3)

	HAZELTINE 1500 EMULATION The Lead-In Code (LI) is selectable in Set-Up Mode to be either an ESC (1B Hex) or a TILDE (7E Hex)		ADDS REGENT 25 EMULATION	
OPERATION	**COMMAND**	**HEX CODE**	**COMMAND**	**HEX CODE**
Cursor Right	DEL	10	ACK	06
Cursor Down	(LI) LF/VT	XX 0A/0B	LF	0A
Cursor Up	(LI) FF	XX0C	SUB	1A
Cursor Left	BS	08	BS/NAK	08/15
Cursor Home	(LI) DC2	XX 12	SOH	01
Bel	BEL	07	BEL	07
Carriage Return	CR	0D	CR	0D
Tab	HT	09		
Keyboard Lock	(LI) NAK	XX 15	ESC 5	1B 35
Keyboard Unlock	(LI) ACK	XX 06	ESC 6	1B 36
Clear All To Spaces	(LI) FS	XX 1C	FF	0C
Reset Write Protect	(LI) US	XX 1F		
Set Write Protect	(LI) EM	XX 19		
Enable Aux Port With Display			DC2	12
Enable Aux Port Without Display			ESC 3	1B 33
Disable Aux Port With/ Without Display			DC4	14
Clear Unprotect To Spaces	(LI) GS	XX 1D		
Direct Cursor Address	(LI) DC1 (COL) (ROW)	XX 11 XX XX	ESC Y (ROW) (COL)	1B 59 XX XX
Read Cursor Address	(LI) ENQ	XX 05		
Insert Line	(LI) SUB	XX 1A		
Delete Line	(LI) DC3	XX 13		
Erase To End Of Line All	(LI) SI	XX 0F	ESC K	1B 48
Erase To End Of Line Unprotected			ESC K	1B 68
Erase To End of Display All	(LI) CAN	XX 18		
Erase To End of Display With Protected Spaces	(LI) ETB	XX 17		

(continued on following page)

EMULATION COMMAND CODE SUMMARY (continued)

NOTE: In Add Regent 25 Emulation the following functions and codes are not supported:

ESC ; - Enter Function Keypad Mode 1

ESC < - Enter Function Keypad Mode 2

ESC = - Enter Function Keypad Mode 3

DLE - Code for Address Horizontal

VT - Code for Address Vertical

APPENDIX C.
ADM 22 MNEMONICS

MNUMONICS	TERM	BINARY WEIGHT/ HEX ADDRESS
A0	ADDRESS 0	#1
A1	ADDRESS 1	#2
A2	ADDRESS 2	#4
A3	ADDRESS 3	#8
A4	ADDRESS 4	=16
A5	ADDRESS 5	=32
A6	ADDRESS 6	=64
A7	ADDRESS 7	=128
A8	ADDRESS 8	=512
A9	ADDRESS 9	=1,024
A10	ADDRESS 10	=2,048
AB0	ADDRESS BUS 0	=1
AB1	ADDRESS BUS 1	=2
AB2	ADDRESS BUS 2	=4
AB3	ADDRESS BUS 3	=8
AB4	ADDRESS BUS 4	=16
AB5	ADDRESS BUS 5	=32
AB6	ADDRESS BUS 6	=64
AB7	ADDRESS BUS 7	=128
AB8	ADDRESS BUS 8	=256
AB9	ADDRESS BUS 9	=512
AB10	ADDRESS BUS 10	=1,024
AB11	ADDRESS BUS 11	=2,048
AB12	ADDRESS BUS 12	=4,096
AB13	ADDRESS BUS 13	=8,192
AB14	ADDRESS BUS 14	=16,384
AB15	ADDRESS BUS 15	=32,768
AD0	ADDRESS/DATA 0	=1
AD1	ADDRESS/DATA 1	=2
AD2	ADDRESS/DATA 2	=4
AD3	ADDRESS/DATA 3	=8
AD4	ADDRESS/DATA 4	=16
AD5	ADDRESS/DATA 5	=32
AD6	ADDRESS/DATA 6	=64
AD7	ADDRESS/DATA 7	=128
BLINKING	BLINKING	
CA0	CHARACTER ADDRESS 0	=1
CA1	CHARACTER ADDRESS 1	=2
CA2	CHARACTER ADDRESS 2	=4
CA3	CHARACTER ADDRESS 3	=8
CRTC	CATHODE RAY TUBE CONTROLLER	$1800
CURSOR	CURSOR	

MNUMONICS	TERM	BINARY WEIGHT/ HEX ADDRESS
DB0	DATA BUS 0	
DB1	DATA BUS 1	
DB2	DATA BUS 2	
DB3	DATA BUS 3	
DB4	DATA BUS 4	
DB5	DATA BUS 5	
DB6	DATA BUS 6	
DB7	DATA BUS 7	
DISP EN	DISPLAY ENABLE	
DISP 1	DISPLAY 1	
DISP 2	DISPLAY 2	
DUAL INTENSITY	DUAL INTENSITY	
EIA/CURRENT LOOP	EIA/CURRENT LOOP	
FUNCTION	FUNCTION	
GRAPHIC	GRAPHIC	
H SYNC	HORIZONTAL SYNC	
HZ-CAP LOCK EN	HERTZ-CAP LOCK ENABLE	=2800
INT1	INTERRUPT 1	
INT2	INTERRUPT 2	
INT3	INTERRUPT 3	
INHIBIT	INHIBIT	
INVERSE	INVERSE	
INVERSE SCREEN	INVERSE SCREEN	
IO/M	INPUT OUTPUT/MEMORY	
IOR	INPUT OUTPUT READ	
IOW	INPUT OUTPUT WRITE	
MEMR	MEMORY READ	
MEMW	MEMORY WRITE	
OUT0	OUT 0	
OUT1	OUT 1	
OUT2	OUT 2	
OUT3	OUT 3	
RA0	RAM ADDRESS 0	=1
RA1	RAM ADDRESS 1	=2
RA2	RAM ADDRESS 2	=4
RA3	RAM ADDRESS 3	=8
RA4	RAM ADDRESS 4	=16
RA5	RAM ADDRESS 5	=32
RA6	RAM ADDRESS 6	=64
RA7	RAM ADDRESS 7	=128
RA8	RAM ADDRESS 8	=256
RA9	RAM ADDRESS 9	=512
RA10	RAM ADDRESS 10	=1,024
RAMSL	RAM SELECT	$2000
RD0	RAM DATA 0	
RD1	RAM DATA 1	
RD2	RAM DATA 2	
RD3	RAM DATA 3	
RD4	RAM DATA 4	

MNUMONICS	TERM	BINARY WEIGHT/ HEX ADDRESS
RD5	RAM DATA 5	
RD6	RAM DATA 6	
RD7	RAM DATA 7	
RD	READ	
READY	READY	
RESETIN	RESET IN	
RESET OUT	RESET OUT	
RST	RESET OUT	
SET BAUD	SET BAUD	$00DF
T2	T2	
UNDERLINE	UNDERLINE	
VIDEO OUT	VIDEO OUT	
VSYNC	VERTICAL SYNC	
WLCKLO	WRITE CLOCK 0	
WLCLKO	WRITE CLOCK 0	
WR	WRITE	
02	PHASE 2	
$3000	$3000	$3000
$3800	$3800	$3800
#	BINARY WEIGHT	
$	HEXADECIMAL ADDRESS	